As individual as you:
AvanTech YOU drawer system

Technik für Möbel

Hettich

As individual as you – AvanTech YOU
The AvanTech YOU drawer system scores from design diversity and creative flexibility, from concealed working parts and perfect performance as well as from an efficient product concept geared to the customer.

Give drawers an unmistakable look:
The AvanTech YOU drawer is distinguished by immaculate beauty from its slimline and sleek 13 mm drawer side profile. And by the ability to turn personal ideas into reality every time.

Get a variety of clever functions:
One drawer, two runners and numerous user friendly functions. Flexibly combinable with each other by using one and the same drilling pattern.

Make production more efficient and cost effective:
The comprehensive platform concept and perfect product adjustments to production and assembly processes guarantee cost effectiveness and efficient work flows while at the same time providing the basis for a broad product lineup.

Design variety and creative flexibility:
Different shapes, colours and materials consistently continue furniture design on the inside too.

Many different options for customisation:
With creative design flexibility in every detail. Attractive highlights are added with design profiles and DesignCapes.

Precision furniture design:
AvanTech YOU competently combines technology, functionality and performance to suit any preference.

hettich.com/short/a07bc8

Find out more:
You can get inspiration and further product details on our website.

Summary

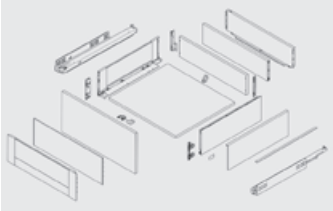

AvanTech YOU
- Range summary
- Exploded diagram
- Overview of components

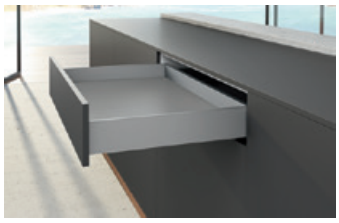

AvanTech YOU drawer
- Height 77 mm
- Height 101 mm
- Height 139 mm

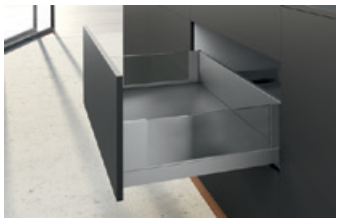

AvanTech YOU pot-and-pan drawer
- Height 187 mm
- Height 251 mm

AvanTech YOU Inlay pot-and-pan drawer
- Height 187 mm

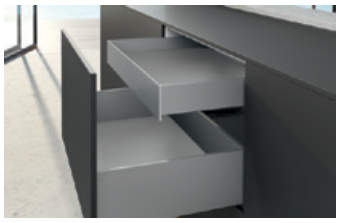

AvanTech YOU internal front panel / rear panel
- Front options for interior drawer / pot-and-pan drawers
- Rear panel options

AvanTech YOU
- Design elements
- Illumination
- Connection, thin front
- Other accessories

AvanTech YOU drawer runners
- Actro YOU with Silent System
- Push to open Silent for Actro YOU
- Quadro V6 YOU with Silent System
- Push to open Silent for Quadro V6 YOU

hettich.com/short/f1d89a

Hettich Technical Assistant
- Assembly / Adjustment
- Service

Quality criteria

AvanTech YOU double walled drawer system

- **Range summary**
- **Powder coated steel, silver / white / anthracite**

Drawer, height 77 mm

8 - 9

Drawer, height 101 mm

10-12

Drawer, height 139 mm

14 - 16

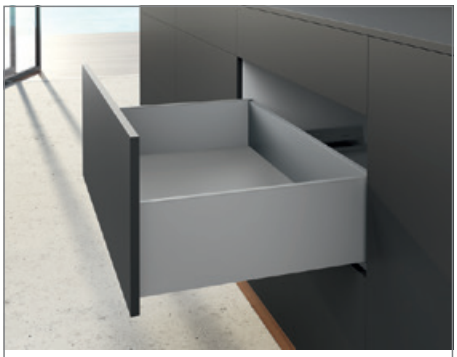

Pot-and-pan drawer, height 187 mm

18 - 20

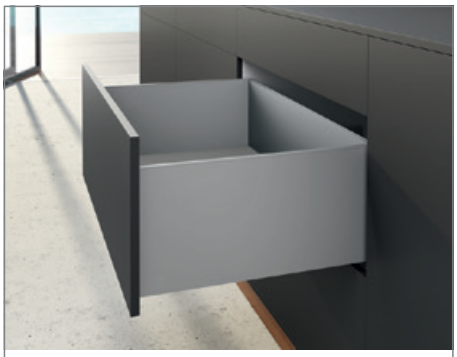

Pot-and-pan drawer, height 251 mm

22 - 24

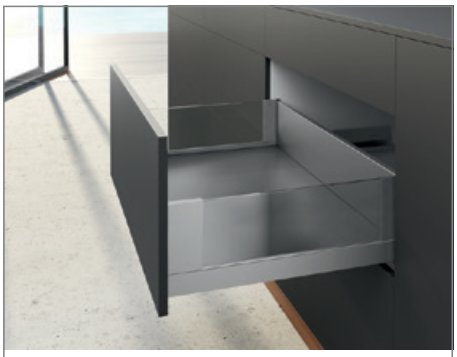

Inlay pot-and-pan drawer, height 187 mm

26 - 28

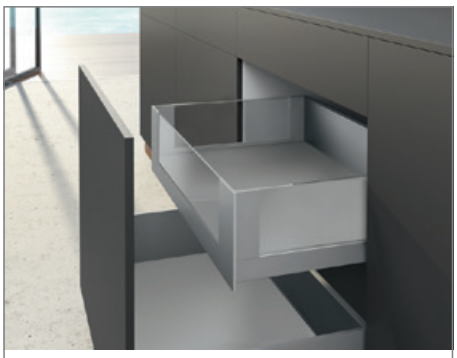

Front options for interior drawer / pot-and-pan drawer

30 - 35

Rear panel options

36 - 37

Narrow base unit

38

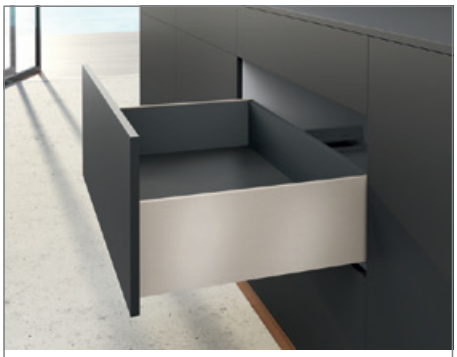

Design options

40 - 43

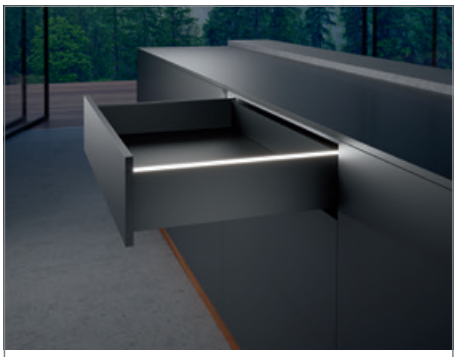

Illumination

44 - 45

Connector for thin front panels

46

AvanTech YOU double walled drawer system

- **Range summary**
- **Powder coated steel, silver / white / anthracite**

Other accessories

46 - 47

Actro YOU / Quadro V6 YOU

48 - 55

Push to open Silent

50, 54

Actro 5D, smooth running and synchronised

57 - 61

Exploded diagram / component overview

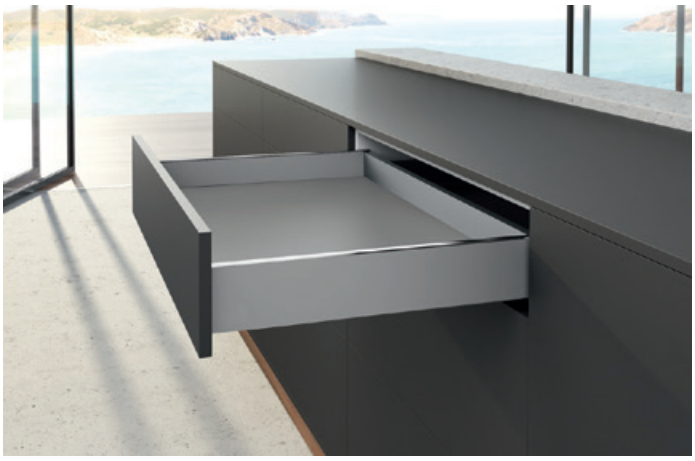

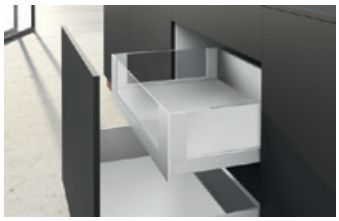

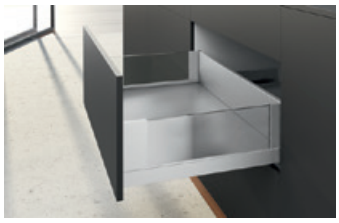

Exploded diagram

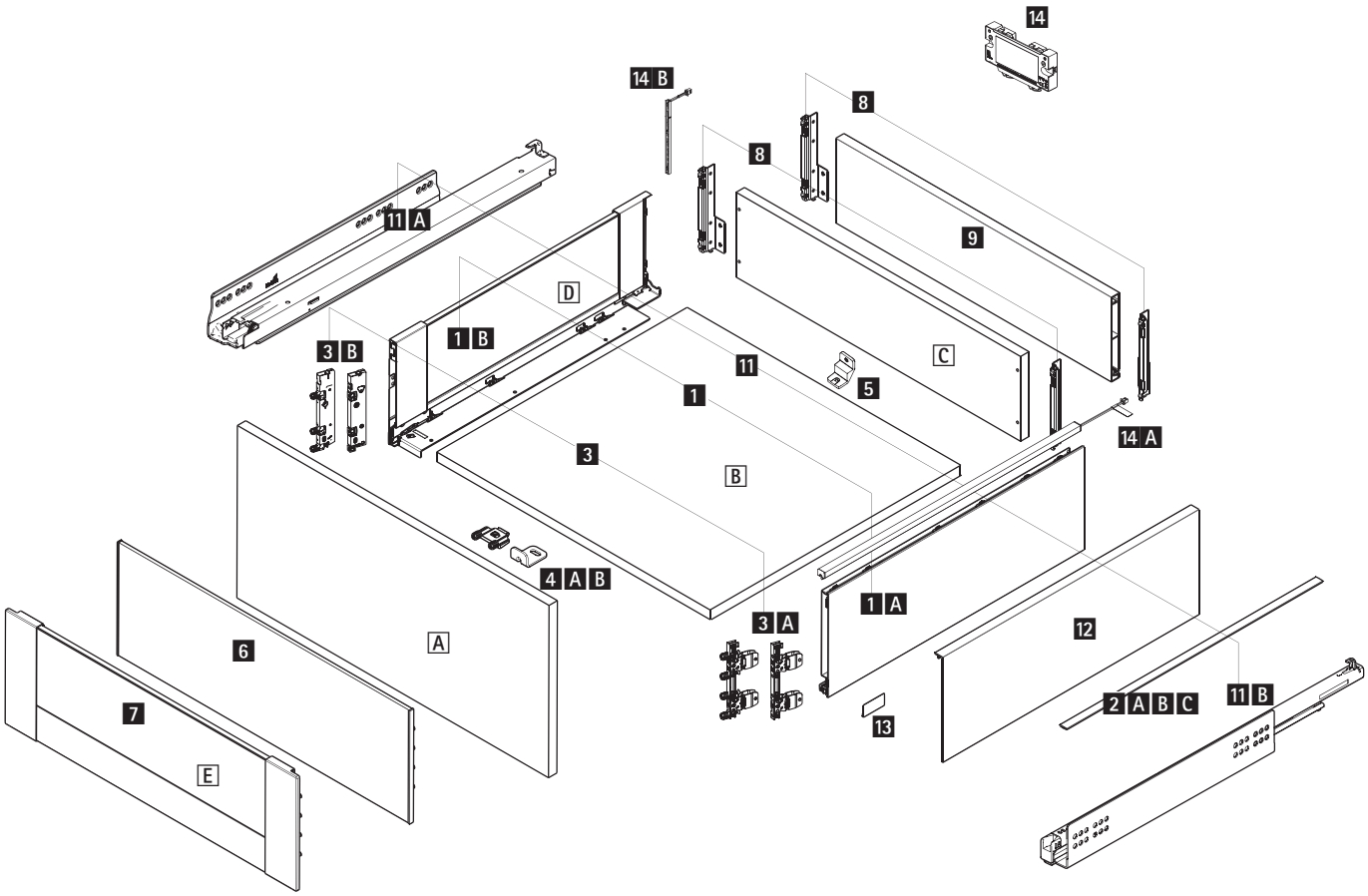

AvanTech YOU system components

Basic components

1 Drawer side profile, left and right
- 1 A AvanTech YOU **or**
- 1 B AvanTech YOU Inlay

2 Design profile for top side of AvanTech YOU drawer side profile

A Front, see front options

3 Front connectors, left and right
- 3 A for AvanTech YOU **or**
- 3 B for AvanTech YOU Inlay

4 A / B Stabiliser for front panel / internal front panel

C Rear panel, see rear panel options

5 Rear panel stabiliser

Front panel options

A Front panel

6 Front panel for internal drawer / internal pot-and-pan drawer

7 Customisable front panel for internal drawer / internal pot-and-pan drawer

Rear panel options

C Wooden rear panel

8 Rear panel connector, left and right

9 Rear panel profile for cutting to length

Design options

2 A / B / C Design profile in drawer side profile colour / foil wrapped / customisable

12 DesignCape

14 A / B Illumination for drawer side profile / drawer side profile Inlay

13 Branding clip

Drawer runners

11 A Actro YOU full extension runner

11 B Quadro V6 YOU full extension runner

Wooden elements cut to size

A Front panel

B Bottom panel

C Wooden rear panel

D AvanTech YOU Inlay - insert in any chosen material

E Customisable internal front panel - insert in any chosen material

AvanTech YOU double walled drawer system

- **Drawer height 77 mm**
- **Powder coated steel, silver / white / anthracite**

Planning / installation dimensions

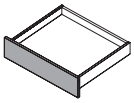

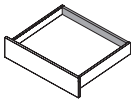

* All dimensions identical for Actro YOU and Quadro V6 YOU

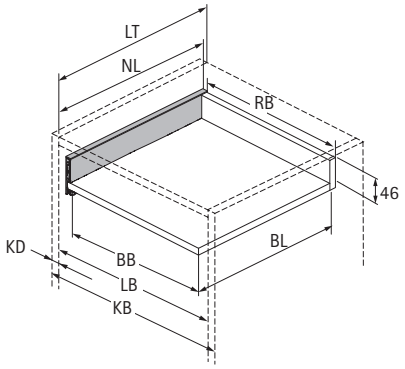

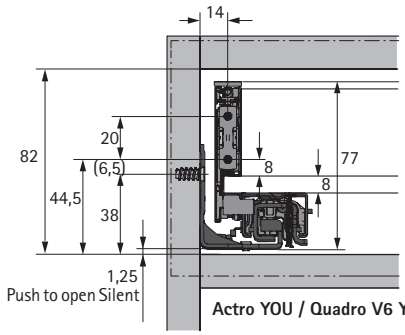

Actro YOU / Quadro V6 YOU*

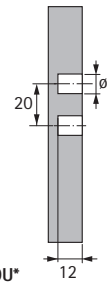

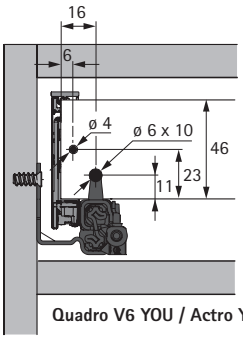

Quadro V6 YOU / Actro YOU*

BB Bottom panel width	KB Cabinet width	NL Nominal length	LB Clear inside width
BL Bottom panel length	RB Rear panel width	KD Cabinet material thickness	LT Clear inside depth

Dimension	mm
BL	NL - 26
BB	LB - 24
RB	LB - 24
LT	NL + 3

Positions for attaching Actro YOU / Quadro V6 YOU drawer runner

Nominal length mm	Hole spacing b1 mm	b2 mm**
400	224	
450	256	288
500	256	320
550	256	320

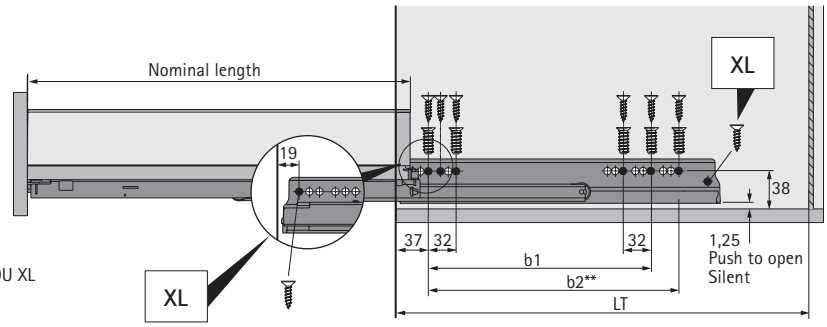

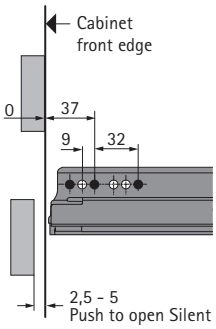

* Hole spacing b2 only for Actro YOU XL

AvanTech YOU double walled drawer system

- **Drawer height 77 mm**
- **Powder coated steel, silver / white / anthracite**

1 A Drawer side profile set, height 77 mm

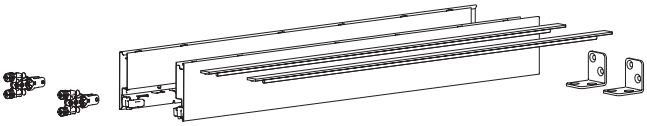

- Integrated vertical and lateral adjustment
- Powder coated steel

Set comprises:
- 1 drawer side profile, left and right
- 2 design profiles in drawer side profile colour
- 2 drawer front knock in connectors
- 2 rear panel stabilisers
- Fixing material

Nominal length mm	Order no. / Colour			PU
	silver	white	anthracite	
500	**9 318 615**	**9 318 713**	**9 318 751**	1 set

3 A Drawer front connector for drawer side profile, height 77 mm

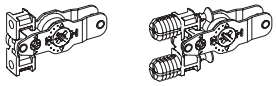

- For screwing on or knocking in
- Steel, plastic

Mounting option	Order no.	PU
for screwing on	**9 255 832**	100 ea.
for knocking in	**9 255 833**	100 ea.

5 Stabiliser, rear panel

- For wooden rear panel in conjunction with 77 mm system height
- 1 each for < 600 mm cabinet body width; 2 each ≥ 600 mm; 3 each ≥ 900 mm; 4 each = 1200 mm
- Steel

Order no.	PU
0 079 665	100 ea.

Advice

- Design options
- Illumination
- Accessories
- Actro YOU / Quadro V6 YOU drawer runners
- Push to open Silent
- Quality criteria

hettich.com/short/fcf727

AvanTech YOU double walled drawer system

- **Drawer height 101 mm**
- **Powder coated steel, silver / white / anthracite**

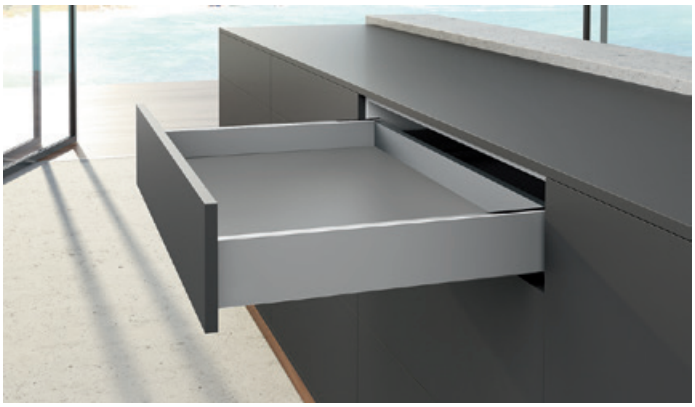

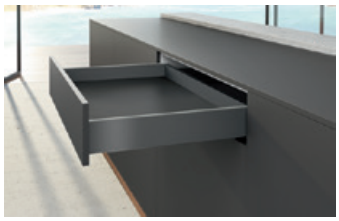

Planning / installation dimensions

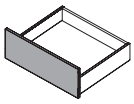

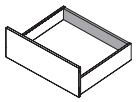

* All dimensions identical for Actro YOU and Quadro V6 YOU

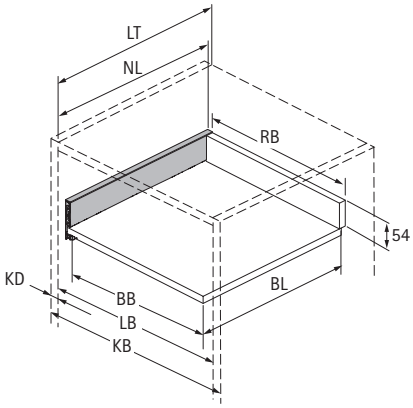

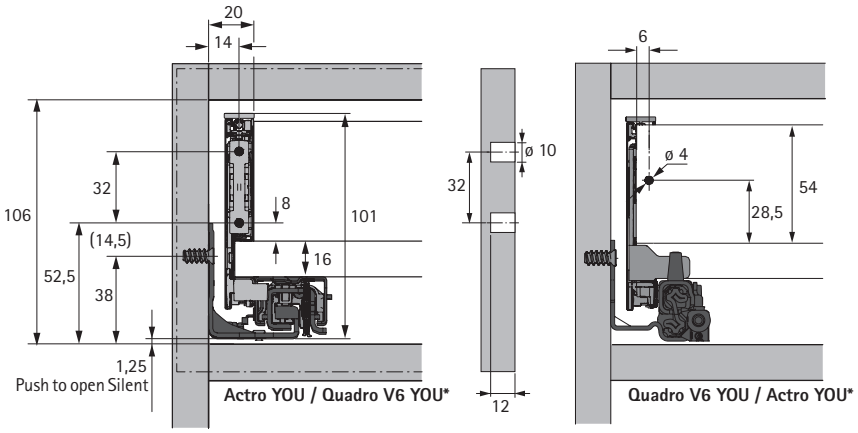

BB Bottom panel width	KB Cabinet width	NL Nominal length	LB Clear inside width
BL Bottom panel length	RB Rear panel width	KD Cabinet material thickness	LT Clear inside depth

Dimension		mm
BL		NL - 21
BB		LB - 24
RB		LB - 24
LT		NL + 3
LT	Internal drawer / internal pot-and-pan drawer	NL + 12
LT	Internal drawer / internal pot-and-pan drawer Push to open Push to open Silent	NL + 21

Positions for attaching Actro YOU / Quadro V6 YOU drawer runner

Nominal length mm	Hole spacing b1 mm	b2 mm**
270	160	
300	160	
350	224	
400	224	
450	256	288
500	256	320
550	256	320
600	256	320
650*	256	416

* Nominal length 650 mm only for Actro YOU XL
** Hole spacing b2 only for Actro YOU XL

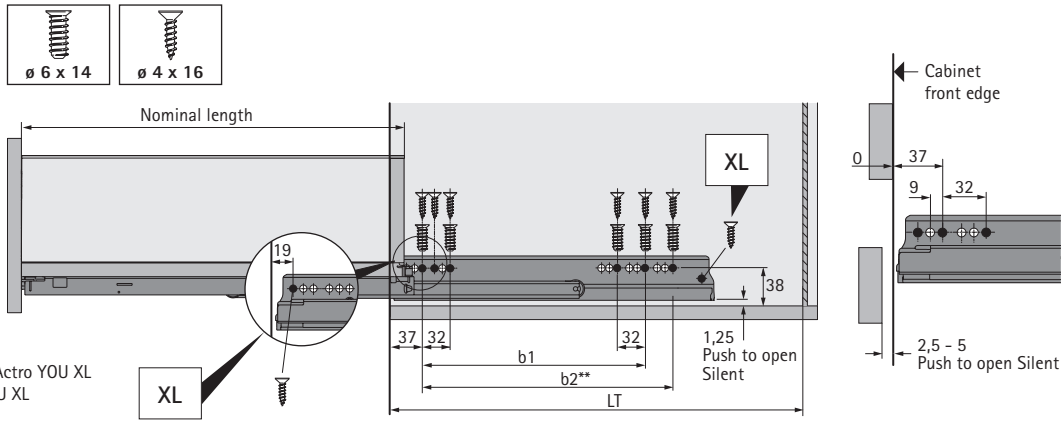

AvanTech YOU double walled drawer system

- **Drawer height 101 mm**
- **Powder coated steel, silver / white / anthracite**

1 A Drawer side profile set, height 101 mm

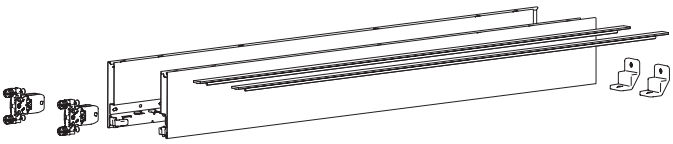

- Integrated vertical, lateral and tilt adjustment
- Powder coated steel

Set comprises:
- 1 drawer side profile, left and right
- 2 design profiles in drawer side profile colour
- 2 drawer front knock in connectors
- 2 rear panel stabilisers
- Fixing material

Nominal length mm	Order no. / Colour			PU
	silver	white	anthracite	
270	9 318 617	9 318 715	9 318 753	1 set
300	9 318 618	9 318 716	9 318 754	1 set
350	9 318 619	9 318 717	9 318 755	1 set
400	9 318 620	9 318 718	9 318 756	1 set
450	9 318 681	9 318 719	9 318 757	1 set
500	9 318 682	9 318 720	9 318 758	1 set
550	9 318 683	9 318 721	9 318 759	1 set
600	9 318 684	9 318 722	9 318 760	1 set
650	9 318 685	9 318 723	9 318 771	1 set

1 A Drawer side profile, height 101 mm

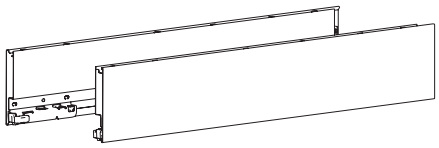

- Integrated vertical, lateral and tilt adjustment
- Powder coated steel

Advice:
- 2 A / B / C Design profile must be ordered separately
- 3 A Drawer front connector must be ordered separately
- 12 Designcape can be ordered separately

Nominal length mm	Order no. / Colour / Mounting side						PU
	silver		white		anthracite		
	left	right	left	right	left	right	
400	9 255 014	9 255 015	9 255 094	9 255 095	9 255 174	9 255 175	20 ea.
450	9 255 016	9 255 017	9 255 096	9 255 097	9 255 176	9 255 177	20 ea.
500	9 255 018	9 255 019	9 255 098	9 255 099	9 255 178	9 255 179	20 ea.

Advice

- Front options for interior drawer/pot-and-pan drawer
- Rear panel options
- Design options
- Illumination
- Accessories
- Actro YOU / Quadro V6 YOU drawer runners
- Push to open Silent
- Quality criteria

hettich.com/short/5e5af6

2 A Design profile in drawer side profile colour

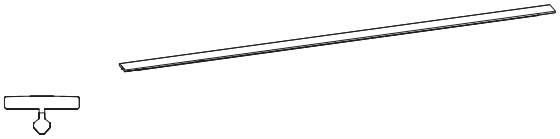

- Any chosen top edge for drawer side profile
- For clipping on
- Plastic, solid coloured

Nominal length mm	Order no. / Colour			PU
	silver	white	anthracite	
400	**9 255 807**	**9 255 816**	**9 255 825**	200 ea.
450	**9 255 808**	**9 255 817**	**9 255 826**	200 ea.
500	**9 255 809**	**9 255 818**	**9 255 827**	200 ea.

3 A Drawer front connector for drawer side profile, height 101 mm

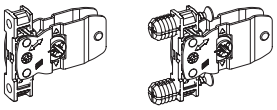

- For screwing on or knocking in
- Steel, plastic

Mounting option	Order no.	PU
for screwing on	**9 255 835**	200 ea.
for knocking in	**9 255 836**	200 ea.

5 Rear panel stabiliser

- For wooden and aluminium rear panels
- 1 for cabinet body width ≥ 600 mm; 2 each ≥ 800 mm; 3 each = 1200 mm
- Plastic

Order no.	PU
9 257 702	200 ea.

Advice

- Front options for interior drawer/pot-and-pan drawer
- Rear panel options
- Design options
- Illumination
- Accessories
- Actro YOU / Quadro V6 YOU drawer runners
- Push to open Silent
- Quality criteria

hettich.com/short/5e5af6

AvanTech YOU double walled drawer system

- **Drawer height 139 mm**
- **Powder coated steel, silver / white / anthracite**

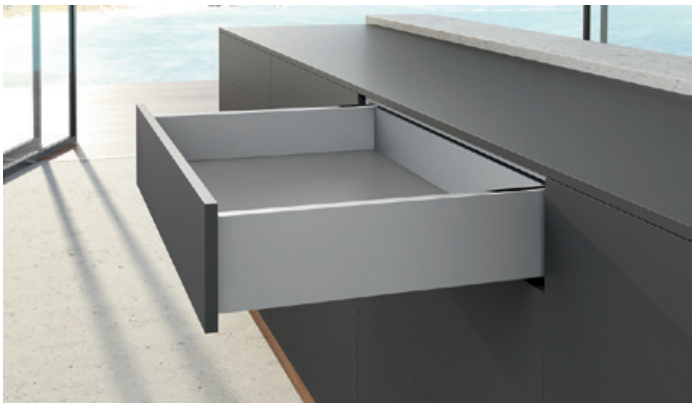

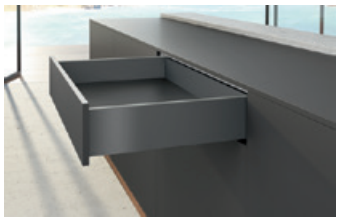

Planning / installation dimensions

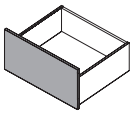

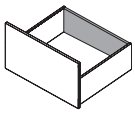

* All dimensions identical for Actro YOU and Quadro V6 YOU

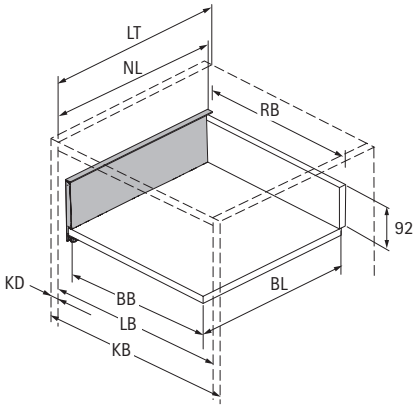

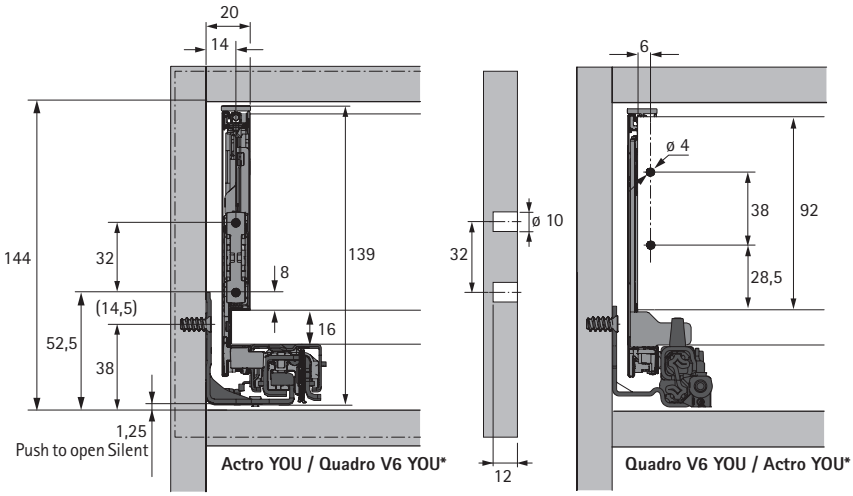

BB Bottom panel width	KB Cabinet width	NL Nominal length	LB Clear inside width
BL Bottom panel length	RB Rear panel width	KD Cabinet material thickness	LT Clear inside depth

Dimension		mm
BL		NL - 21
BB		LB - 24
RB		LB - 24
LT		NL + 3
LT	Internal drawer / internal pot-and-pan drawer	NL + 12
LT	Internal drawer / internal pot-and-pan drawer Push to open Push to open Silent	NL + 21

Positions for attaching Actro YOU / Quadro V6 YOU drawer runner

Nominal length mm	Hole spacing b1 mm	b2 mm**
270	160	
300	160	
350	224	
400	224	
450	256	288
500	256	320
550	256	320
600	256	320
650*	256	416

* Nominal length 650 mm only for Actro YOU XL
** Hole spacing b2 only for Actro YOU XL

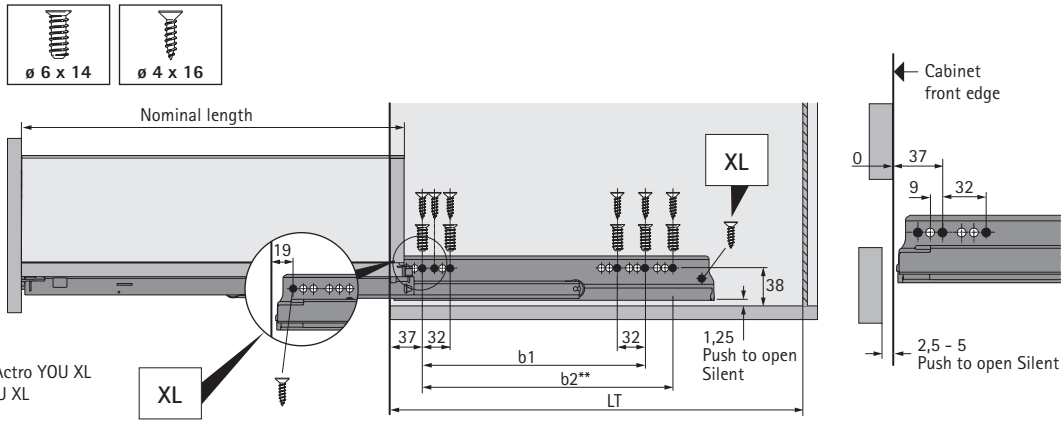

AvanTech YOU double walled drawer system

- **Drawer height 139 mm**
- **Powder coated steel, silver / white / anthracite**

1 A Drawer side profile set, height 139 mm

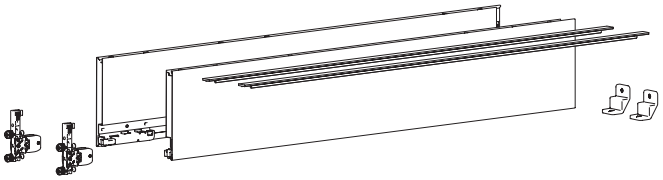

- Integrated vertical, lateral and tilt adjustment
- Powder coated steel

Set comprises:
- 1 drawer side profile, left and right
- 2 design profiles in drawer side profile colour
- 2 drawer front knock in connectors
- 2 rear panel stabilisers
- Fixing material

Nominal length mm	Order no. / Colour			PU
	silver	white	anthracite	
270	9 318 686	9 318 724	9 318 772	1 set
300	9 318 687	9 318 725	9 318 773	1 set
350	9 318 688	9 318 726	9 318 774	1 set
400	9 318 689	9 318 727	9 318 775	1 set
450	9 318 690	9 318 728	9 318 776	1 set
500	9 318 691	9 318 729	9 318 777	1 set
550	9 318 692	9 318 730	9 318 778	1 set
600	9 318 693	9 318 731	9 318 779	1 set
650	9 318 694	9 318 732	9 318 780	1 set

1 A Drawer side profile, height 139 mm

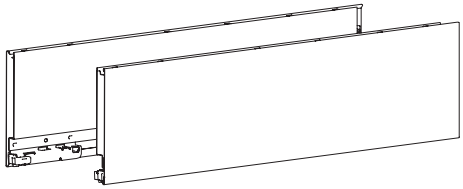

- Integrated vertical, lateral and tilt adjustment
- Powder coated steel

Advice:
- 2 A / B / C Design profile must be ordered separately
- 3 A Drawer front connector must be ordered separately

Nominal length mm	Order no. / Colour / Mounting side						PU
	silver		white		anthracite		
	left	right	left	right	left	right	
400	9 255 032	9 255 033	9 255 112	9 255 113	9 255 192	9 255 193	20 ea.
450	9 255 034	9 255 035	9 255 114	9 255 115	9 255 194	9 255 195	20 ea.
500	9 255 036	9 255 037	9 255 116	9 255 117	9 255 196	9 255 197	20 ea.
550			9 255 118	9 255 119	9 255 198	9 255 199	20 ea.

Advice

- Front options for interior drawer/pot-and-pan drawer
- Rear panel options
- Design options
- Illumination
- Accessories
- Actro YOU / Quadro V6 YOU drawer runners
- Push to open Silent
- Quality criteria

hettich.com/short/614d98

2 A Design profile in drawer side profile colour

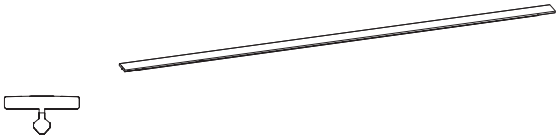

- Any chosen top edge for drawer side profile
- For clipping on
- Plastic, solid coloured

Nominal length mm	Order no. / Colour			PU
	silver	white	anthracite	
400	**9 255 807**	**9 255 816**	**9 255 825**	200 ea.
450	**9 255 808**	**9 255 817**	**9 255 826**	200 ea.
500	**9 255 809**	**9 255 818**	**9 255 827**	200 ea.
550		**9 255 819**	**9 255 828**	200 ea.

3 A Drawer front connector for drawer side profile, height 139 mm

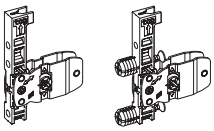

- For screwing on or knocking in
- Steel, plastic

Mounting option	Order no.	PU
for screwing on	**9 257 884**	200 ea.
for knocking in	**9 257 885**	200 ea.

5 Rear panel stabiliser

- For wooden and aluminium rear panels
- 1 for cabinet body width ≥ 600 mm; 2 each ≥ 800 mm; 3 each = 1200 mm
- Plastic

Order no.	PU
9 257 702	200 ea.

Advice

- Front options for interior drawer/pot-and-pan drawer
- Rear panel options
- Design options
- Illumination
- Accessories
- Actro YOU / Quadro V6 YOU drawer runners
- Push to open Silent
- Quality criteria

hettich.com/short/614d98

AvanTech YOU double walled drawer system

- **Pot-and-pan drawer, height 187 mm**
- **Powder coated steel, silver / white / anthracite**

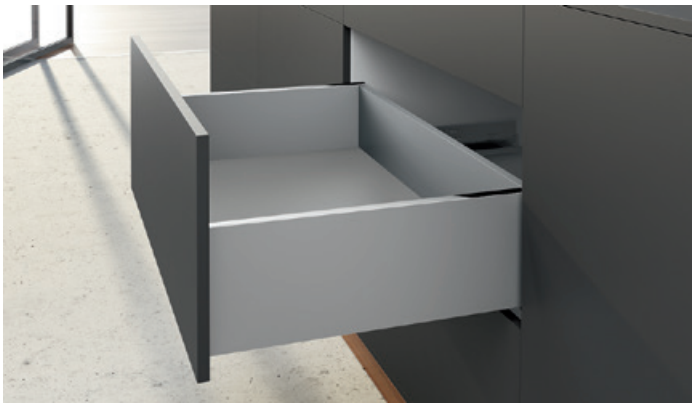

Planning / installation dimensions

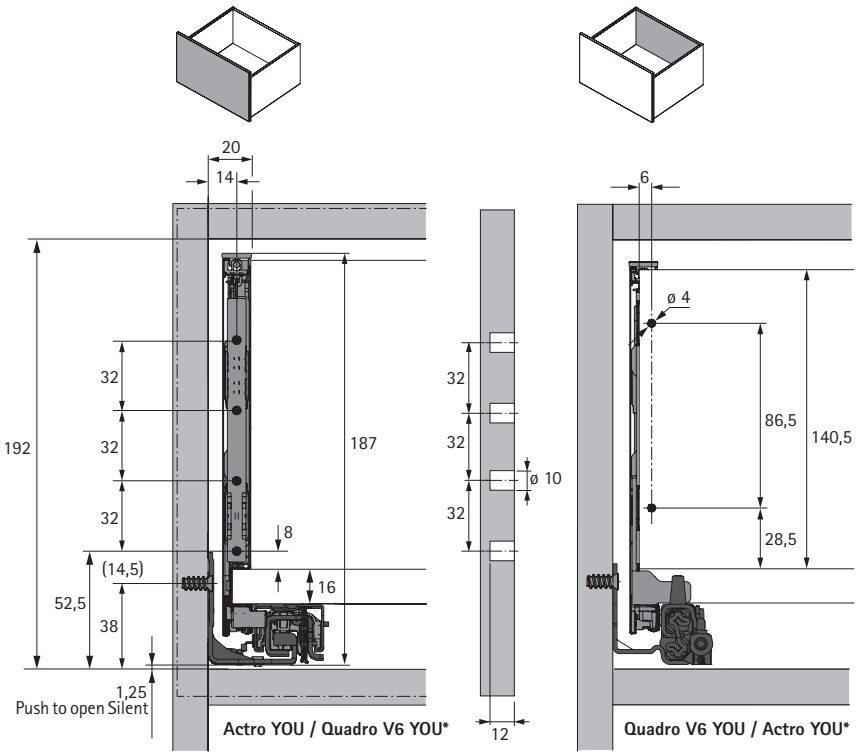

* All dimensions identical for Actro YOU and Quadro V6 YOU

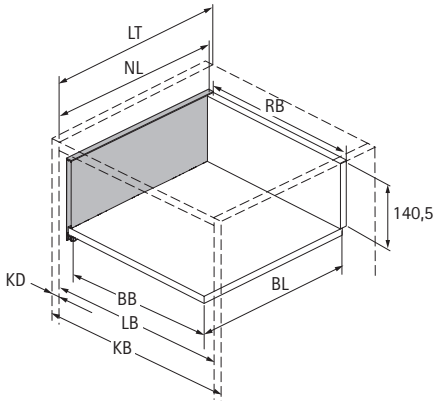

BB Bottom panel width	KB Cabinet width	NL Nominal length	LB Clear inside width
BL Bottom panel length	RB Rear panel width	KD Cabinet material thickness	LT Clear inside depth

Dimension		mm
BL		NL - 21
BB		LB - 24
RB		LB - 24
LT		NL + 3
LT	Internal drawer / internal pot-and-pan drawer	NL + 12
LT	Internal drawer / internal pot-and-pan drawer Push to open Push to open Silent	NL + 21

Positions for attaching Actro YOU / Quadro V6 YOU drawer runner

Nominal length mm	Hole spacing b1 mm	b2 mm**
270	160	
300	160	
350	224	
400	224	
450	256	288
500	256	320
550	256	320
600	256	320
650*	256	416

* Nominal length 650 mm only for Actro YOU XL
** Hole spacing b2 only for Actro YOU XL

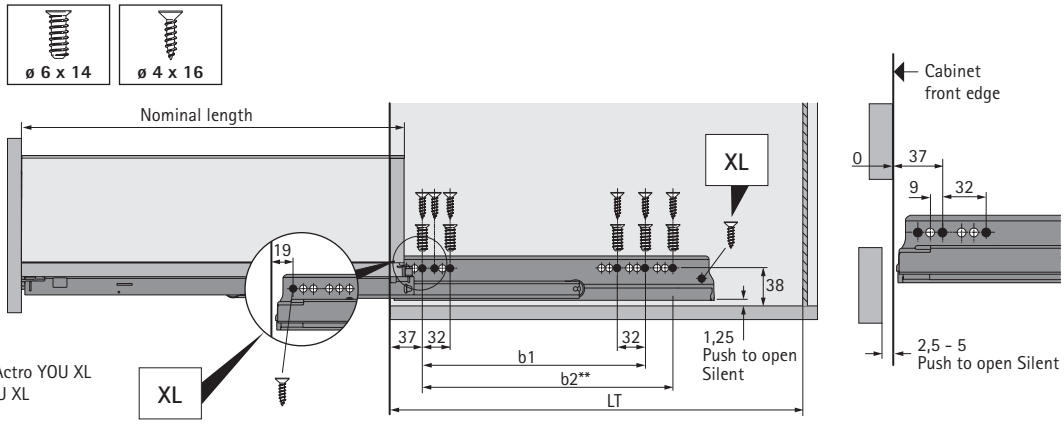

AvanTech YOU double walled drawer system

- **Pot-and-pan drawer, height 187 mm**
- **Powder coated steel, silver / white / anthracite**

1 A Drawer side profile set, height 187 mm

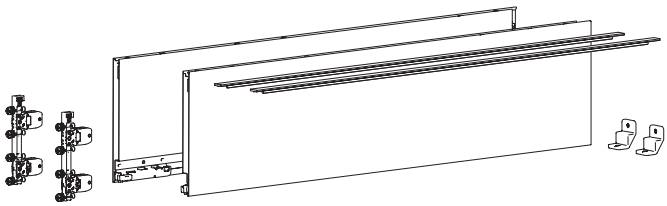

- Integrated vertical, lateral and tilt adjustment
- Powder coated steel

Set comprises:
- 1 drawer side profile, left and right
- 2 design profiles in drawer side profile colour
- 2 drawer front knock in connectors
- 2 rear panel stabilisers
- Fixing material

Nominal length mm	Order no. / Colour			PU
	silver	white	anthracite	
270	9 318 695	9 318 733	9 318 791	1 set
300	9 318 696	9 318 734	9 318 792	1 set
350	9 318 697	9 318 735	9 318 793	1 set
400	9 318 698	9 318 736	9 318 794	1 set
450	9 318 699	9 318 737	9 318 795	1 set
500	9 318 700	9 318 738	9 318 796	1 set
550	9 318 701	9 318 739	9 318 797	1 set
600	9 318 702	9 318 740	9 318 798	1 set
650	9 318 703	9 318 741	9 318 799	1 set

1 A Drawer side profile, height 187 mm

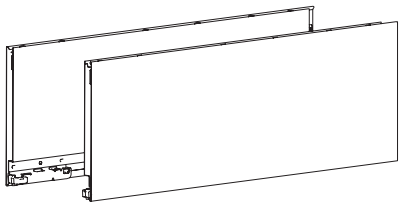

- Integrated vertical, lateral and tilt adjustment
- Powder coated steel

Advice:
- 2 A / B / C Design profile must be ordered separately
- 3 A Drawer front connector must be ordered separately
- 12 Designcape can be ordered separately

Nominal length mm	Order no. / Colour / Mounting side						PU
	silver		white		anthracite		
	left	right	left	right	left	right	
400	9 255 050	9 255 051	9 255 130	9 255 131	9 255 210	9 255 211	10 ea.
450	9 255 052	9 255 053	9 255 132	9 255 133	9 255 212	9 255 213	10 ea.
500	9 255 054	9 255 055	9 255 134	9 255 135	9 255 214	9 255 215	10 ea.
550			9 255 136	9 255 137	9 255 216	9 255 217	10 ea.

Advice

- Front options for interior drawer/pot-and-pan drawer
- Rear panel options
- Design options
- Illumination
- Accessories
- Actro YOU / Quadro V6 YOU drawer runners
- Push to open Silent
- Quality criteria

hettich.com/short/da22c2

2 A Design profile in drawer side profile colour

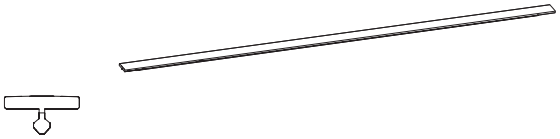

- Any chosen top edge for drawer side profile
- For clipping on
- Plastic, solid coloured

Nominal length mm	Order no. / Colour			PU
	silver	white	anthracite	
400	**9 255 807**	**9 255 816**	**9 255 825**	200 ea.
450	**9 255 808**	**9 255 817**	**9 255 826**	200 ea.
500	**9 255 809**	**9 255 818**	**9 255 827**	200 ea.
550		**9 255 819**	**9 255 828**	200 ea.

3 A Drawer front connector for drawer side profile, height 187 / 251 mm

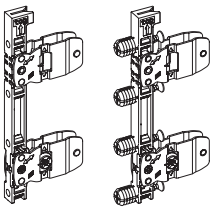

- For screwing on or knocking in
- Steel, plastic

Mounting option	Order no.	PU
for screwing on	**9 255 838**	200 ea.
for knocking in	**9 255 839**	200 ea.

5 Rear panel stabiliser

- For wooden and aluminium rear panels
- 1 for cabinet body width ≥ 600 mm; 2 each ≥ 800 mm; 3 each = 1200 mm
- Plastic

Order no.	PU
9 257 702	200 ea.

Advice

- Front options for interior drawer/pot-and-pan drawer
- Rear panel options
- Design options
- Illumination
- Accessories
- Actro YOU / Quadro V6 YOU drawer runners
- Push to open Silent
- Quality criteria

hettich.com/short/da22c2

AvanTech YOU double walled drawer system

- **Pot-and-pan drawer, height 251 mm**
- **Powder coated steel, silver / white / anthracite**

Planning / installation dimensions

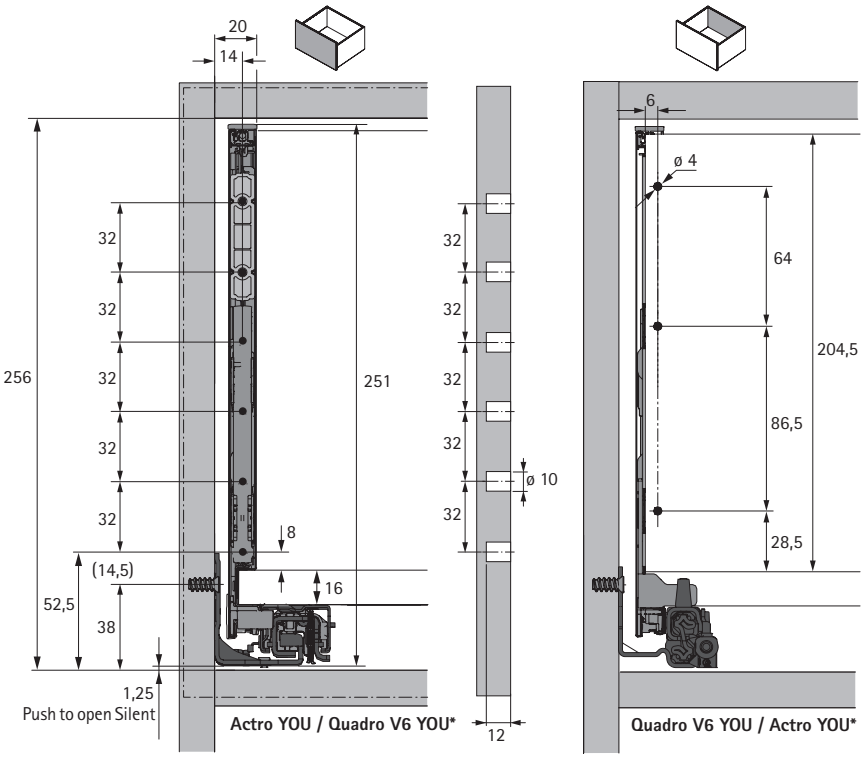

* All dimensions identical for Actro YOU and Quadro V6 YOU

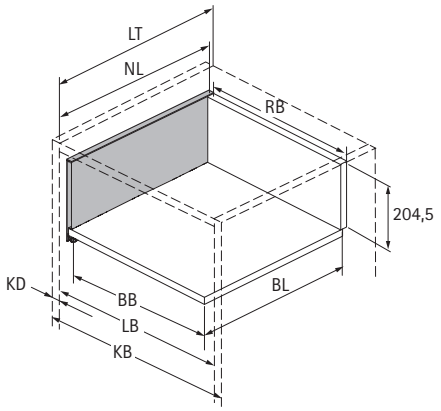

BB Bottom panel width	KB Cabinet width	NL Nominal length	LB Clear inside width
BL Bottom panel length	RB Rear panel width	KD Cabinet material thickness	LT Clear inside depth

Dimension	mm
BL	NL - 21
BB	LB - 24
RB	LB - 24
LT	NL + 3

Positions for attaching Actro YOU / Quadro V6 YOU drawer runner

Nominal length mm	Hole spacing b1 mm	b2 mm**
350	224	
400	224	
450	256	288
500	256	320
550	256	320
600	256	320
650*	256	416

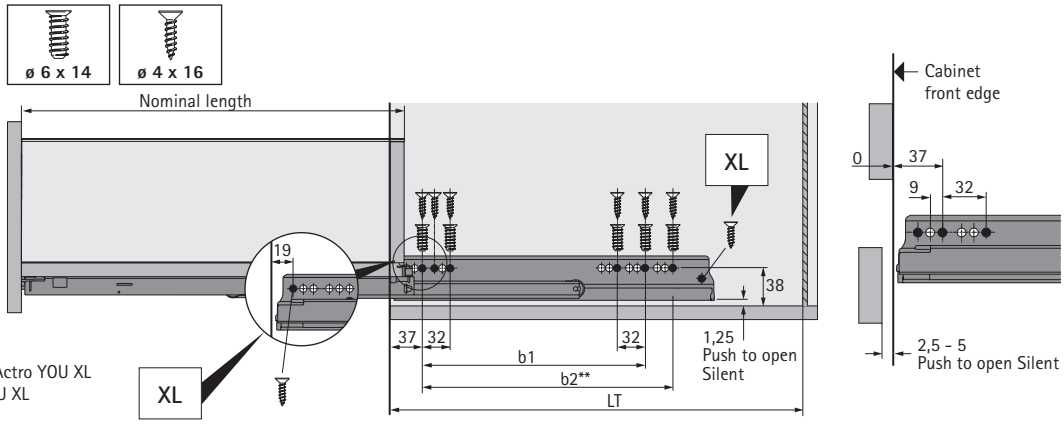

* Nominal length 650 mm only for Actro YOU XL
** Hole spacing b2 only for Actro YOU XL

AvanTech YOU double walled drawer system

- **Pot-and-pan drawer, height 251 mm**
- **Powder coated steel, silver / white / anthracite**

1 A Drawer side profile set, height 251 mm

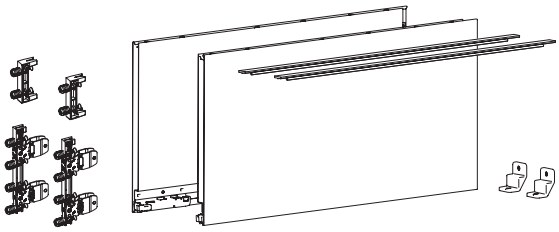

- Integrated vertical, lateral and tilt adjustment
- Powder coated steel

Set comprises:
- 1 drawer side profile, left and right
- 2 Design profiles in drawer side profile colour
- 2 drawer front knock in connectors
- 2 knock in stabilizers for H 251 mm
- 2 rear panel stabilisers
- Fixing material

Nominal length mm	Order no. / Colour			PU
	silver	white	anthracite	
350	9 318 704	9 318 742	9 318 800	1 set
400	9 318 705	9 318 743	9 318 801	1 set
450	9 318 706	9 318 744	9 318 802	1 set
500	9 318 707	9 318 745	9 318 803	1 set
550	9 318 708	9 318 746	9 318 804	1 set
600	9 318 709	9 318 747	9 318 805	1 set
650	9 318 710	9 318 748	9 318 806	1 set

1 A Drawer side profile, height 251 mm

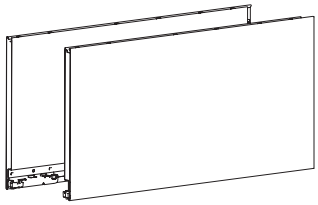

- Integrated vertical, lateral and tilt adjustment
- Powder coated steel

Advice:
- 2 A / B / C Design profile must be ordered separately
- 3 A Drawer front connector must be ordered separately

Nominal length mm	Order no. / Colour / Mounting side				PU
	white		anthracite		
	left	right	left	right	
400	9 255 148	9 255 149	9 255 228	9 255 229	10 ea.
450	9 255 150	9 255 151	9 255 230	9 255 231	10 ea.
500	9 255 152	9 255 153	9 255 232	9 255 233	10 ea.

Advice

- Rear panel options
- Design options
- Illumination
- Accessories
- Actro YOU / Quadro V6 YOU drawer runners
- Push to open Silent
- Quality criteria

hettich.com/short/9874cb

2 A Design profile in drawer side profile colour

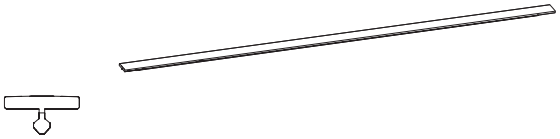

- Any chosen top edge for drawer side profile
- For clipping on
- Plastic, solid coloured

Nominal length mm	Order no. / Colour		PU
	white	anthracite	
400	**9 255 816**	**9 255 825**	200 ea.
450	**9 255 817**	**9 255 826**	200 ea.
500	**9 255 818**	**9 255 827**	200 ea.

3 A Drawer front connector for drawer side profile, height 187 / 251 mm

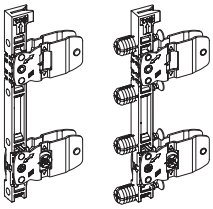

- For screwing on or knocking in
- Steel, plastic

Mounting option	Order no.	PU
for screwing on	**9 255 838**	200 ea.
for knocking in	**9 255 839**	200 ea.

3 C Drawer front connector stabiliser, height 251 mm

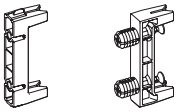

- For screwing on or knocking in
- Steel, plastic

Mounting option	Order no.	PU
for screwing on	**9 257 887**	200 ea.
for knocking in	**9 257 888**	200 ea.

5 Rear panel stabiliser

- For wooden and aluminium rear panels
- 1 for cabinet body width ≥ 600 mm; 2 each ≥ 800 mm; 3 each = 1200 mm
- Plastic

Order no.	PU
9 257 702	200 ea.

Advice

- Rear panel options
- Design options
- Illumination
- Accessories
- Actro YOU / Quadro V6 YOU drawer runners
- Push to open Silent
- Quality criteria

hettich.com/short/9874cb

AvanTech YOU double walled drawer system

- **Inlay pot-and-pan drawer, height 187 mm**
- **Powder coated steel, silver / white / anthracite**

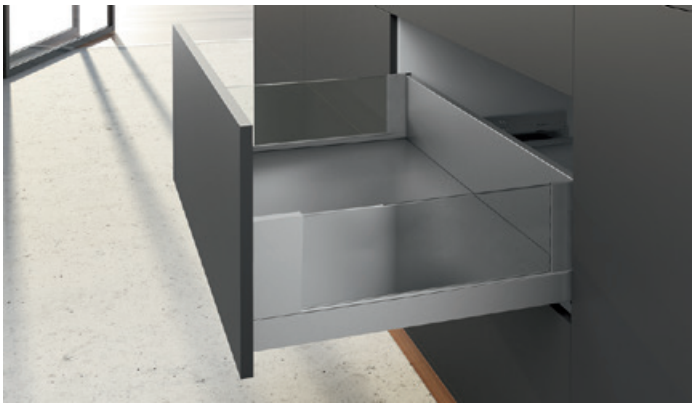

- For combining with glass inlay or any chosen material
- For using materials in a thickness of 10 mm (for 8 mm thick materials see additional adapter)
- Integrated vertical, lateral and tilt adjustment
- Steel, powder coated

Planning / installation dimensions

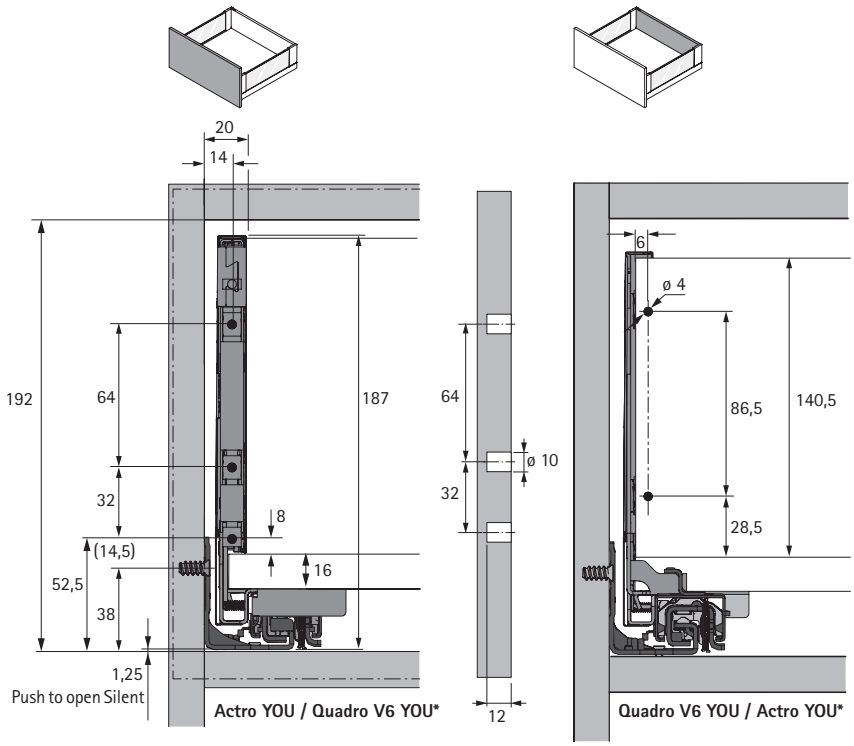

* All dimensions identical for Actro YOU and Quadro V6 YOU

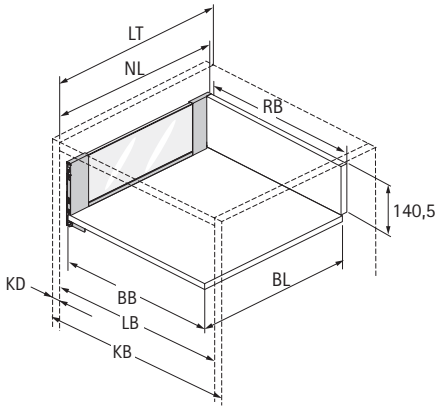

BB Bottom panel width	KB Cabinet width	NL Nominal length	LB Clear inside width
BL Bottom panel length	RB Rear panel width	KD Cabinet material thickness	LT Clear inside depth

Dimension		mm
BL		NL - 21
BB		LB - 24
RB		LB - 24
LT		NL + 3
LT	Internal drawer / internal pot-and-pan drawer	NL + 12
LT	Internal drawer / internal pot-and-pan drawer Push to open Push to open Silent	NL + 21

Positions for attaching Actro YOU / Quadro V6 YOU drawer runner

Nominal length mm	Hole spacing b1 mm	b2 mm**
350	224	
400	224	
450	256	288
500	256	320
550	256	320
600	256	320
650*	256	416

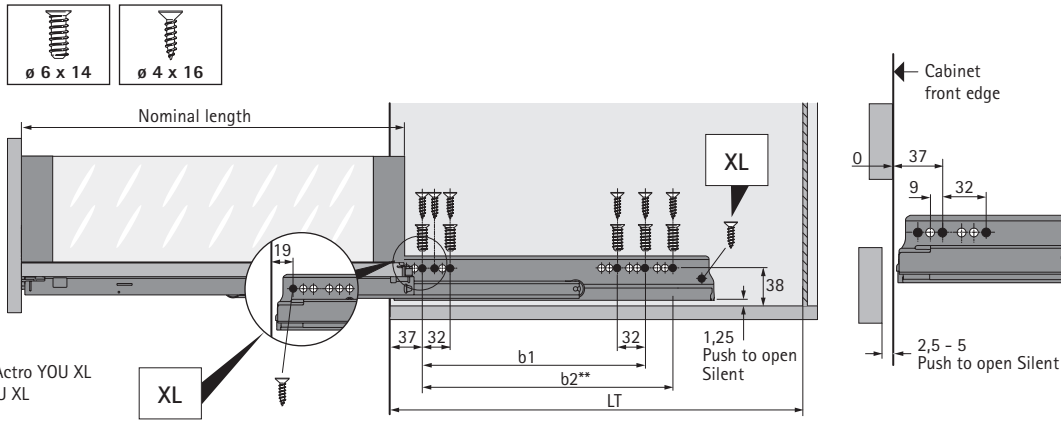

* Nominal length 650 mm only for Actro YOU XL
** Hole spacing b2 only for Actro YOU XL

AvanTech YOU double walled drawer system

- **Inlay pot-and-pan drawer, height 187 mm**
- **Powder coated steel, silver / white / anthracite**

1 A Inlay drawer side profile set, height 187 mm

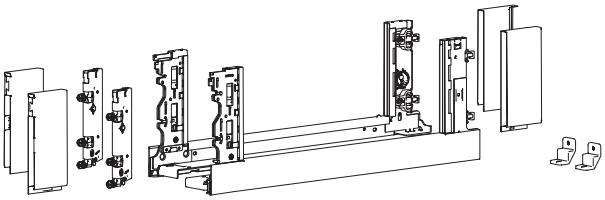

- For combining with glass inlay or any chosen material
- For using materials in a thickness of 10 mm (for 8 mm thick materials see additional adapter)
- Integrated vertical, lateral and tilt adjustment
- Steel, powder coated

Set comprises:
- 1 Inlay drawer side profile, left and right
- 1 cap, front, left and right
- 1 cap, rear, left and right
- 2 drawer front knock in connectors for Inlay drawer
- 2 rear panel stabilisers
- Fixing material

Nominal length mm	Order no. / Colour			PU
	silver	white	anthracite	
350	**9 318 808**	**9 318 817**	**9 318 824**	1 set
400	**9 318 809**	**9 318 818**	**9 318 825**	1 set
450	**9 318 811**	**9 318 819**	**9 318 826**	1 set
500	**9 318 812**	**9 318 820**	**9 318 827**	1 set
550	**9 318 814**	**9 318 821**	**9 318 828**	1 set
600	**9 318 815**	**9 318 822**	**9 318 829**	1 set
650	**9 318 816**	**9 318 823**	**9 318 830**	1 set

Glass insert for Inlay drawer side profile

- Clear glass, 10 mm, one long edge satin finished

Nominal length mm	Order no.	PU
350	**9 283 178**	1 set
400	**9 283 179**	1 set
450	**9 283 180**	1 set
500	**9 283 181**	1 set
550	**9 283 182**	1 set
600	**9 283 183**	1 set
650	**9 283 184**	1 set

Advice

- Rear panel options
- Internal front panel options
- Design options
- Illumination
- Technical accessories
- Actro YOU / Quadro V6 YOU drawer runners
- Push to open Silent
- Quality criteria

hettich.com/short/0e02a7

- **Inlay pot-and-pan drawer, height 187 mm**
- **Powder coated steel, silver / white / anthracite**

Planning / installation dimensions

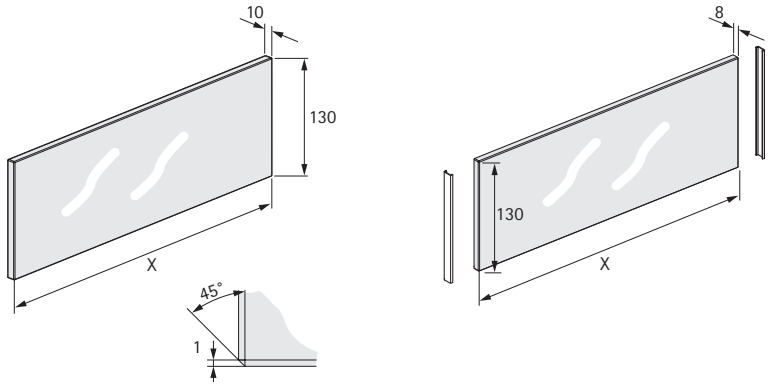

	10 mm	8 mm
NL mm	X mm	X mm
350	227	225
400	277	275
450	327	325
500	377	375
550	427	425
600	477	475
650	527	525

3 B Drawer front connector for Inlay drawer side profile, height 187 mm

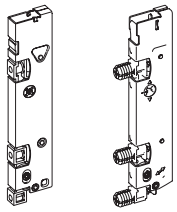

- For screwing on or knocking in
- Steel, plastic

Mounting option	Order no.	PU
for screwing on	**9 257 257**	100 ea.
for knocking in	**9 257 258**	100 ea.

5 Rear panel stabiliser

- For wooden and aluminium rear panels
- 1 for cabinet body width ≥ 600 mm; 2 each ≥ 800 mm; 3 each = 1200 mm
- Plastic

Order no.	PU
9 257 702	200 ea.

Inlay drawer side profile adapter for 8 mm material

- For using material in a thickness of 8 mm
- 2 adapters are required for each drawer side profile
- Transparent plastic

Order no.	PU
9 268 677	100 ea.

Advice

- Rear panel options
- Internal front panel options
- Design options
- Illumination
- Technical accessories
- Actro YOU / Quadro V6 YOU drawer runners
- Push to open Silent
- Quality criteria

hettich.com/short/0e02a7

- **Front panel options**
- **Front panel in aluminium for internal drawer / internal pot-and-pan drawer, in heights of 101, 139, 187 mm**

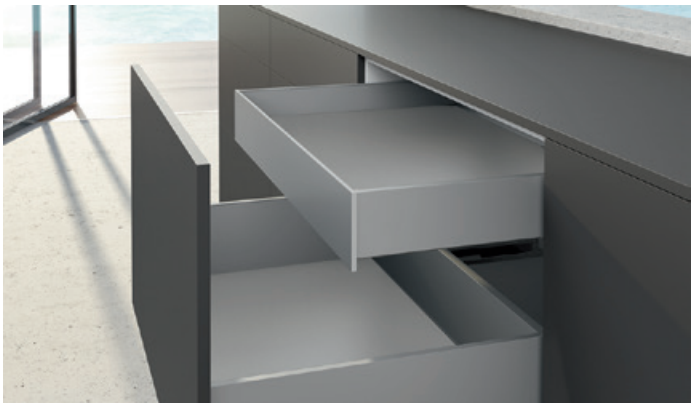

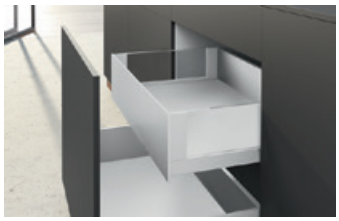

6 A Internal front panel, profile for cutting to length

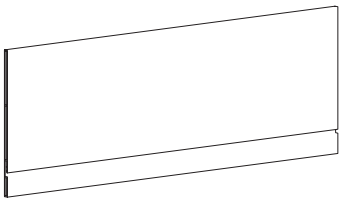

- For variable and standard cabinet widths
- Length 2000 mm
- Material thickness 6 mm
- Powder coated aluminium

Advice:
- Please use new internal front panels with increased height when combined with Illumination Design Profile
- 6 B oder 6 C Connector set must be ordered separately

Nominal height mm	Order no. / Colour						PU
	For drawer side profile without Illumination			For drawer side profile with Illumination			
	silver	white	anthracite	silver	white	anthracite	
101	9 257 269	9 257 273	9 257 277	9 327 202	9 327 205	9 327 208	1 ea.
139	9 257 270	9 257 274	9 257 278	9 327 203	9 327 206	9 327 209	1 ea.
187	9 257 271	9 257 275	9 257 279	9 327 204	9 327 207	9 327 210	1 ea.

6 B Connector set for internal front panel for cutting to length, for use with drawer side profile

- For framing and connecting drawer side profile
- Steel, plastic

Set comprises:
- 2 front connectors for drawer side profile
- 2 end caps
- 2 stabilisers for internal front panel
- Fixing material

Advice:
- Please use specific connectors (increase in height) when combined with Illumination DesignProfile
- For combining with 6 A internal front for cutting to length

Nominal height mm	Order no. / Colour						PU
	For drawer side profile without Illumination			For drawer side profile with Illumination			
	silver	white	anthracite	silver	white	anthracite	
101	9 257 611	9 257 615	9 257 619	9 327 211	9 327 214	9 327 217	1 set
139	9 257 612	9 257 616	9 257 620	9 327 212	9 327 215	9 327 218	1 set
187	9 257 613	9 257 617	9 257 621	9 327 213	9 327 216	9 327 219	1 set

Advice

- AvanTech YOU drawer
- AvanTech YOU pot-and-pan drawer
- AvanTech YOU Inlay pot-and-pan drawer
- Rear panel options
- Design options / Illumination / Accessories
- Actro YOU / Quadro V6 YOU drawer runners
- Push to open Silent
- Quality criteria

hettich.com/short/9c1fe2

6 C Connector set for internal front panel for cutting to length, for use with Inlay drawer side profile

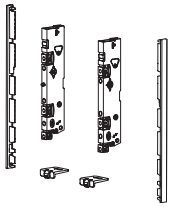

- For framing and connecting drawer side profile
- Steel, plastic

Set comprises:
- 2 knock in front connectors for Inlay drawer side profile
- 2 end caps
- 2 stabilisers for internal front panel
- Fixing material

Advice:
- For combining with 6 A internal front for cutting to length

Nominal height mm	Order no. / Colour			PU
	silver	white	anthracite	
187	9 257 623	9 257 625	9 257 627	1 set

3 A Drawer front connector for drawer side profile, height 101 mm

- for screwing on
- Steel

Mounting option	Order no.	PU
for screwing on	9 255 835	200 ea.

3 A Drawer front connector for drawer side profile, height 139 mm

- for screwing on
- Steel

Mounting option	Order no.	PU
for screwing on	9 257 884	200 ea.

3 A Drawer front connector for drawer side profile, height 187 / 251 mm

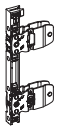

- for screwing on
- Steel

Mounting option	Order no.	PU
for screwing on	9 255 838	200 ea.

3 B Drawer front connector for Inlay drawer side profile, height 187 mm

- for screwing on
- Powder coated steel

Mounting option	Order no.	PU
for screwing on	9 257 257	100 ea.

catch for internal front panel

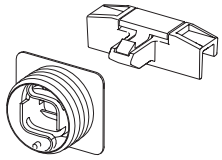

- For pressing in / clipping on
- Plastic

Set comprises:
- 1 catch
- 1 housing for catch
- Fixing material

Order no. / Colour			PU
silver	white	anthracite	
9 257 734	9 257 735	9 257 736	1 set

4 B Stabiliser for internal front panel

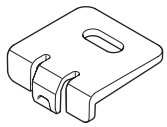

- For stabilising wide internal front panels
- Recommended for cabinet body widths > 600 mm and over
- Plastic

Order no.	PU
9 257 641	100 ea.

Planning / installation dimensions

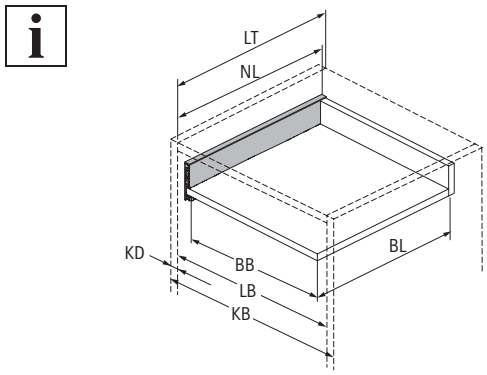

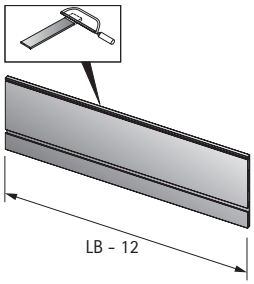

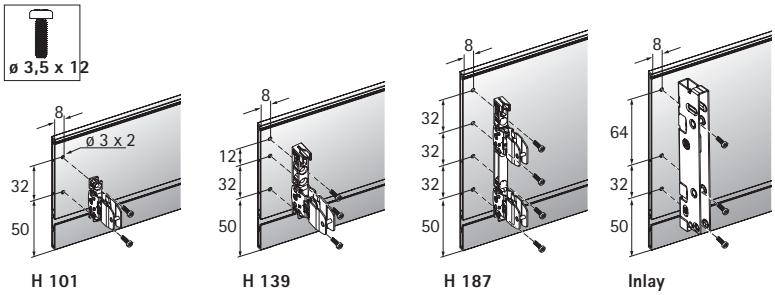

Advice

- AvanTech YOU drawer
- AvanTech YOU pot-and-pan drawer
- AvanTech YOU Inlay pot-and-pan drawer
- Rear panel options
- Design options / Illumination / Accessories
- Actro YOU / Quadro V6 YOU drawer runners
- Push to open Silent
- Quality criteria

hettich.com/short/9c1fe2

- **Front panel options**
- **Front panel in aluminium for internal drawer / internal pot-and-pan drawer, in heights of 101, 139, 187 mm**

Front panel for standard internal drawer

H 101

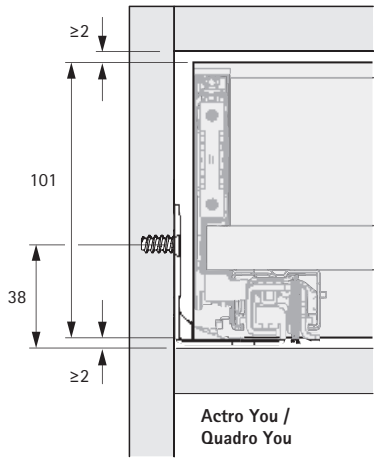

H 139

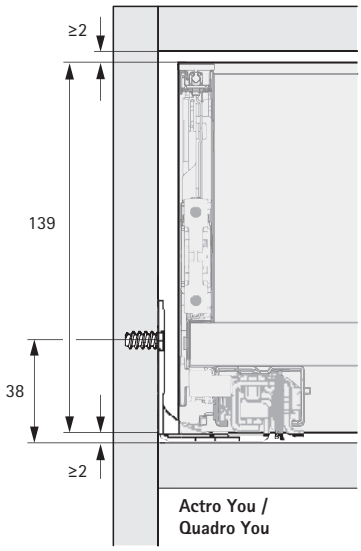

H 187

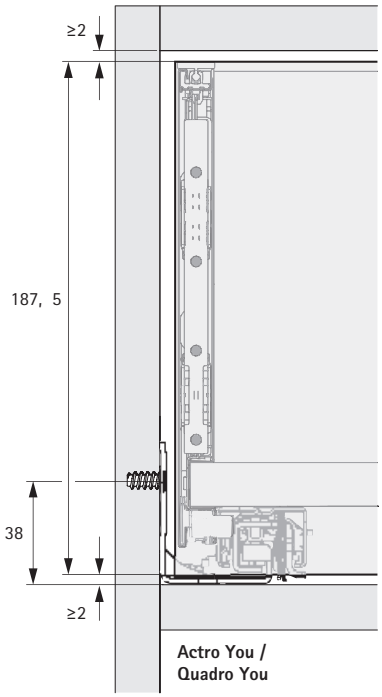

BB Bottom panel width	KB Cabinet body width	NL Nominal length	LB Clear inside width
BL Bottom panel length	RB Rear panel width	KD Cabinet body side thicknesses	LT Clear inside depth

Front panel for internal drawer when using Illumination Design profile

i

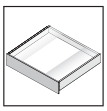

H 101 Illumination

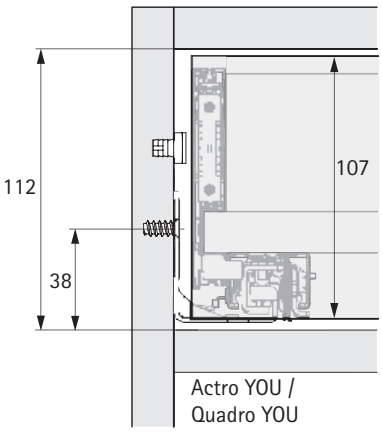

H 139 Illumination

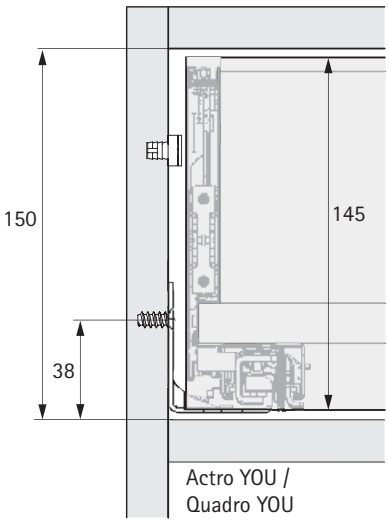

H 187 Illumination

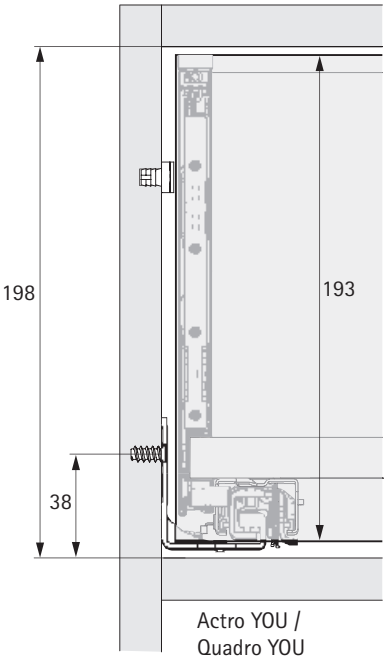

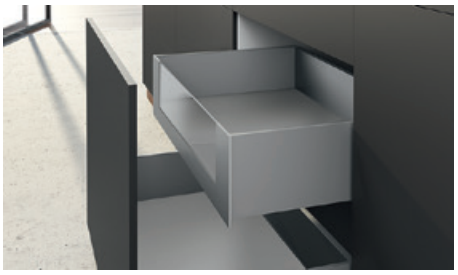
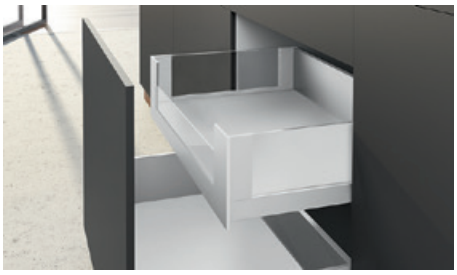
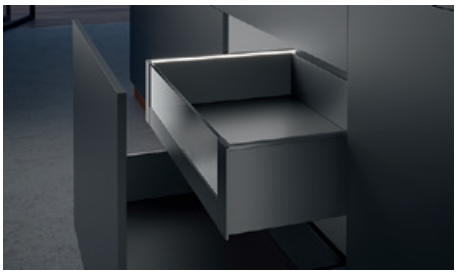

7 A Support profile for customisable internal front panel

- For holding 10 mm glass inlay or any chosen material
- For variable or standard cabinet body widths
- Length 2000 mm
- Powder coated aluminium

Advice:
- 7 B oder 7 C Connector for customisable front panel must be ordered separately

Nominal height mm	Order no. / Colour			PU
	silver	white	anthracite	
187	9 257 663	9 257 664	9 257 665	1 ea.

7 B Connector set for customisable internal front panel, for use with drawer side profile

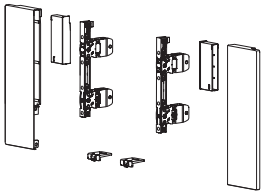

- For combining with 10 mm glass inlay or any chosen material
- Powder coated steel

Set comprises:
- 1 connector for customisable internal front panel, left and right
- 1 drawer front connectors for Inlay drawer side profile, left and right
- 2 spacer elements for low application
- 2 stabilisers for internal front panel
- Fixing material

Advice:
- Please use specific connectors (increase in height) when combined with Illumination DesignProfile
- 7 A Support profile for customisable internal front panel must be ordered separately

Nominal height mm	Order no. / Colour						PU
	For drawer side profile without Illumination			For drawer side profile with Illumination			
	silver	white	anthracite	silver	white	anthracite	
187	9 257 651	9 257 652	9 257 653	9 327 220	9 327 221	9 327 222	1 set

7 C Connector set for customisable internal front panel, for use with Inlay drawer side profile

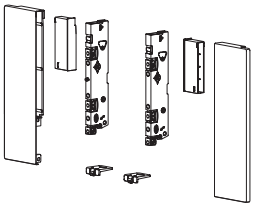

- For combining with 10 mm glass inlay or any chosen material
- Powder coated steel

Set comprises:
- 1 connector for customisable internal front panel, left and right
- 1 drawer front connectors for Inlay drawer side profile, left and right
- 2 spacer elements for low application
- 2 stabilisers for internal front panel
- Fixing material

Advice:
- 7 A Support profile for customisable internal front panel must be ordered separately

Nominal height mm	Order no. / Colour			PU
	silver	white	anthracite	
187	9 257 657	9 257 658	9 257 659	1 set

- **Front panel options**
- **Customisable front panel for internal pot-and-pan drawer, in height of 187 mm**

Planning / installation dimensions

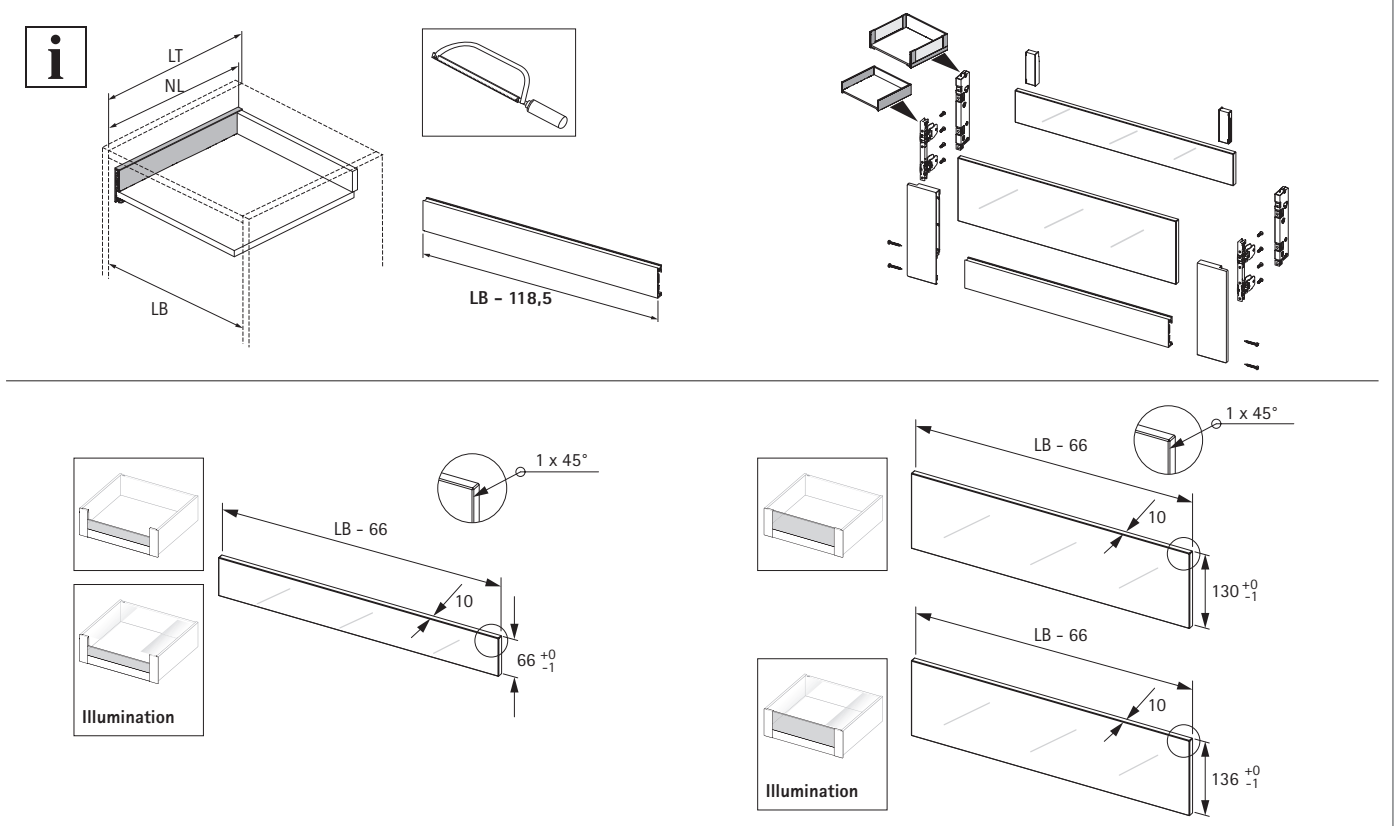

Glass insert for AvanTech YOU customisable internal front panel

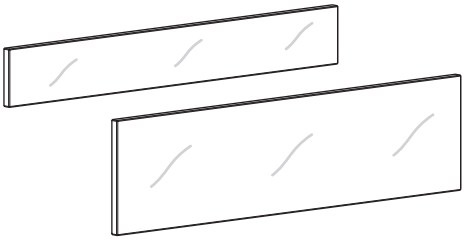

- Clear glass, satin finished edge

Cabinet body width mm	Order no. / Height mm height 66 mm	height 130 mm	PU
450	**9 283 185**	**9 283 189**	1 ea.
600	**9 283 186**	**9 283 190**	1 ea.
900	**9 283 187**	**9 283 191**	1 ea.
1200	**9 283 188**	**9 283 192**	1 ea.

Advice

- AvanTech YOU drawer
- AvanTech YOU pot-and-pan drawer
- AvanTech YOU Inlay pot-and-pan drawer
- Rear panel options
- Design options / Illumination / Accessories
- Actro YOU / Quadro V6 YOU drawer runners
- Push to open Silent
- Quality criteria

hettich.com/short/fe9274

8 Connector for rear panel profile

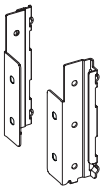

- Rear panel connectors for use with timber or aluminum back panels
- Powder coated steel

Nominal height mm	Order no. / Colour / Mounting side						PU
	silver		white		anthracite		
	left	right	left	right	left	right	
101	9 257 666	9 257 667	9 257 678	9 257 679	9 257 690	9 257 691	20 ea.
139	9 257 668	9 257 669	9 257 680	9 257 681	9 257 692	9 257 693	20 ea.
187	9 257 670	9 257 671	9 257 682	9 257 683	9 257 694	9 257 695	20 ea.
251	9 257 672	9 257 673	9 257 684	9 257 685	9 257 696	9 257 697	20 ea.

9 Rear panel profile for cutting to length

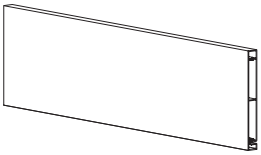

- For variable and standard cabinet body widths
- Length 2000 mm
- Powder coated aluminium

Advice:
- 8 Rear panel connector can be ordered separately

Nominal height mm	Order no. / Colour			PU
	silver	white	anthracite	
101	9 257 300	9 257 305	9 257 310	1 ea.
139	9 257 301	9 257 306	9 257 311	1 ea.
187	9 257 302	9 257 307	9 257 312	1 ea.
251	9 257 303	9 257 308	9 257 313	1 ea.

Advice

- AvanTech YOU drawer
- AvanTech YOU pot-and-pan drawer
- AvanTech YOU Inlay pot-and-pan drawer
- Front options for interior drawer/pot-and-pan drawer
- Design options / Illumination / Accessories
- Actro YOU / Quadro V6 YOU drawer runners
- Push to open Silent
- Quality criteria

hettich.com/short/1e2dc5

Rear panel connectors

Planning / installation dimensions

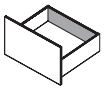

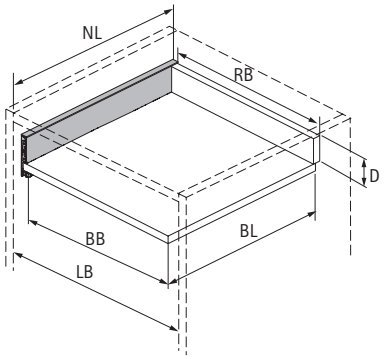

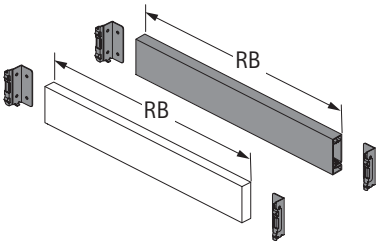

BL	NL - 21
BB	LB - 24
RB	LB - 41
D H 101	54
D H 139	92
D H 187	140,5
D H 251	204,5

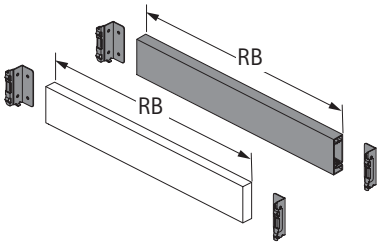

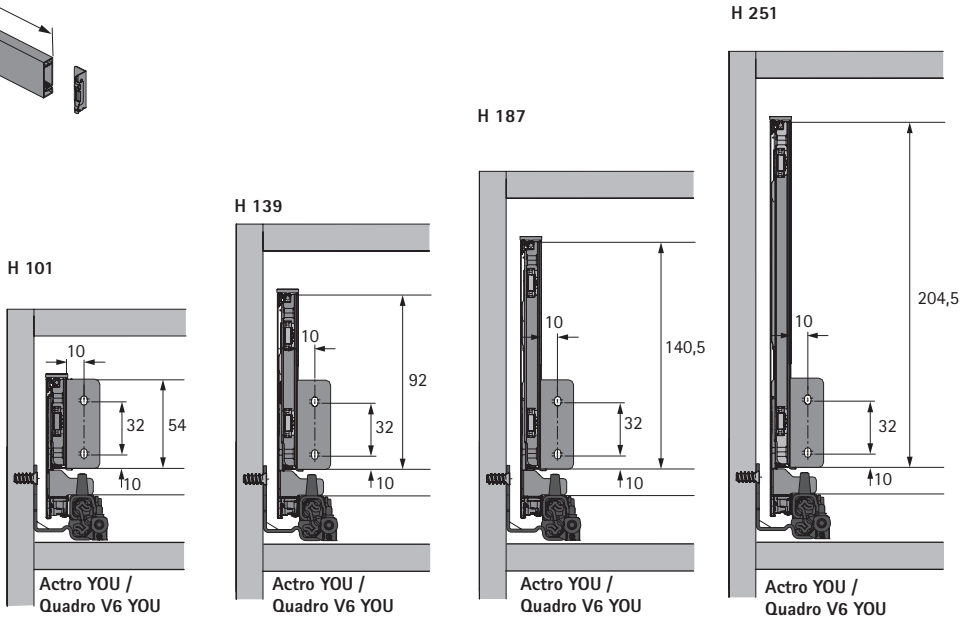

Example application with narrow base unit

- Cabinet height 750 mm max.
- Minimum cabinet width = 120 mm when using PTO Silent System
- Cabinet width 300 mm max.
- Use one pair of runners (either Actro or Quadro V6 YOU) mounted diagonally
- Narrow unit can be achieved by using a 101 and 187 mm high profile with all necessary components
- Total load capacity 20 kg max.

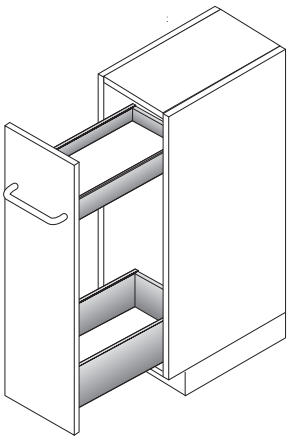

Example application

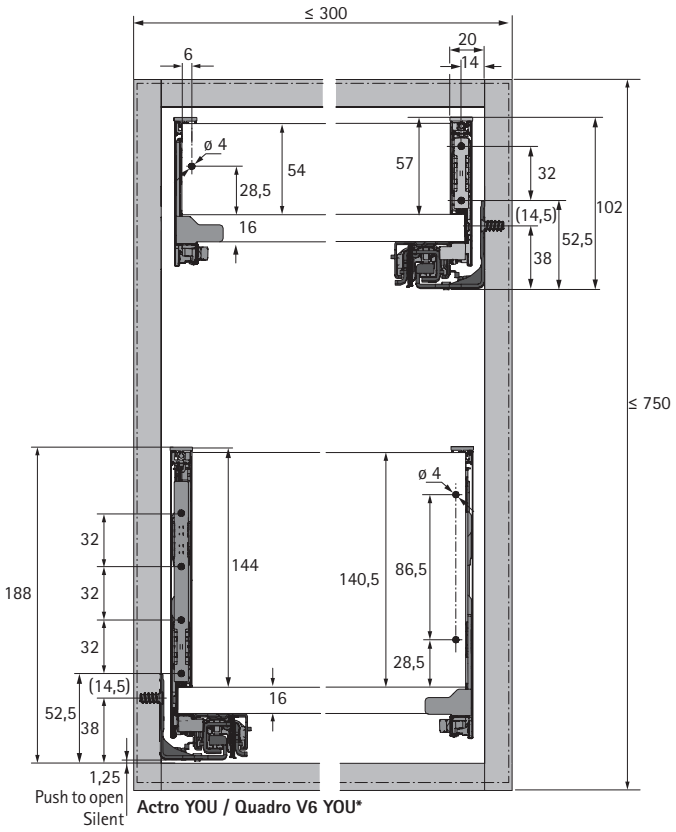

interzum
Award
High product quality
DESIGN
AWARD
2022
reddot winner 2022

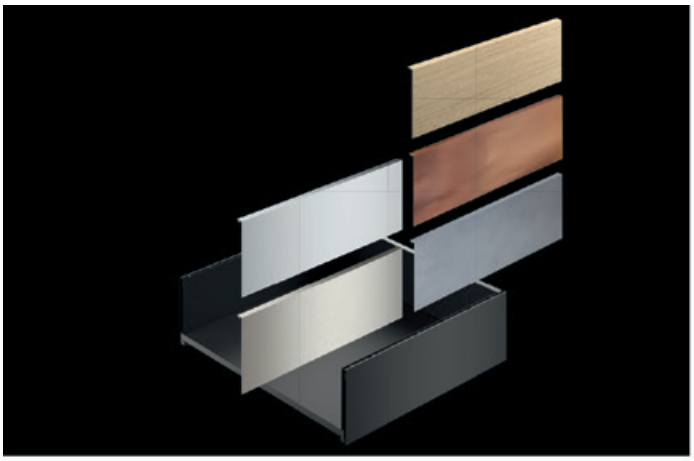

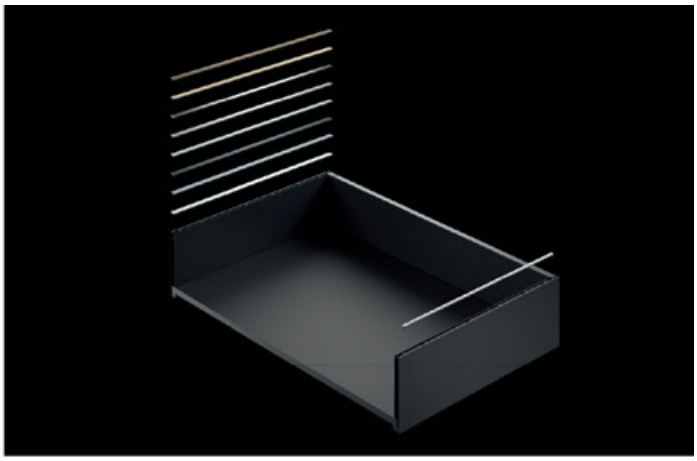

AvanTech YOU fascinates!

The AvanTech YOU drawer system provides a huge amount of design flexibility in terms of colour, shape and material, giving you the key to successfully turning your own furniture design ideas into reality. Incredibly easy to achieve with AvanTech YOU, whatever personal character you want a design to reflect is a matter for you to decide. With a simple click, design profiles or DesignCapes conjure an accentuated, visual transformation. AvanTech YOU Inlay, the elegant drawer side profile with glass inlay, does away with the boundaries between space and furniture and focuses the eye on furniture design. Or you can feature your drawers with the new LED signature lighting to make even more of a 'wow' effect. Printing your logo on the drawer side profile completes your design. With this versatile system, however, you can let your own imagination run free. With the option of using any chosen materials, your ideas become distinctive solutions that stand apart! Whether for use in the bathroom, living room or kitchen – your wishes are easily fulfilled with the broad diversity of this product range and the many different ways of creating furniture with a look of individuality.

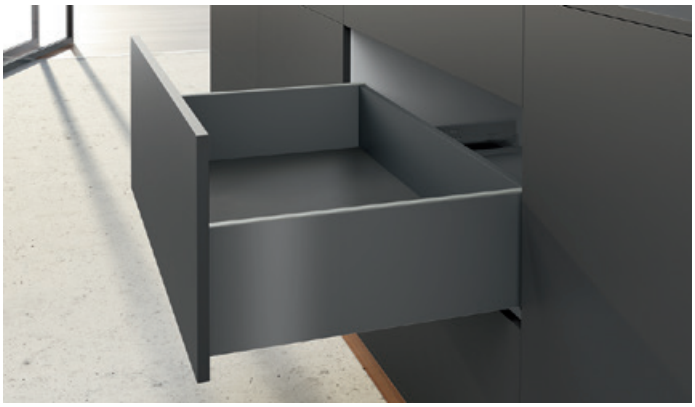

Already customised as standard.
Use the many different ways of shaping and customising the design of your furniture.
Give your furniture unmistakable character and respond quickly to the latest design trends.
The fastest way: use standard design profiles available Design profiles in the drawer side profile colour finishes of white, silver, anthracite or in aluminium look, stainless steel look, chrome look, walnut look or oak look.

2 B Design profile in accent colour

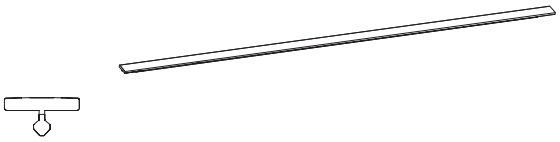

- Any chosen top edge for drawer side profile
- For clipping on
- Plastic, foil wrapped

Nominal length mm	Order no. / Colour					PU
	aluminium look	chrome look	stainless steel look	oak look	walnut look	
270	9 255 759	9 255 777	9 255 768	9 255 786	9 255 795	100 ea.
300	9 255 760	9 255 778	9 255 769	9 255 787	9 255 796	100 ea.
350	9 255 761	9 255 779	9 255 770	9 255 788	9 255 797	100 ea.
400	9 255 762	9 255 780	9 255 771	9 255 789	9 255 798	100 ea.
450	9 255 763	9 255 781	9 255 772	9 255 790	9 255 799	100 ea.
500	9 255 764	9 255 782	9 255 773	9 255 791	9 255 800	100 ea.
550	9 255 765	9 255 783	9 255 774	9 255 792	9 255 801	100 ea.
600	9 255 766	9 255 784	9 255 775	9 255 793	9 255 802	100 ea.
650	9 255 767	9 255 785	9 255 776	9 255 794	9 255 803	100 ea.

2 C Customisable design profile

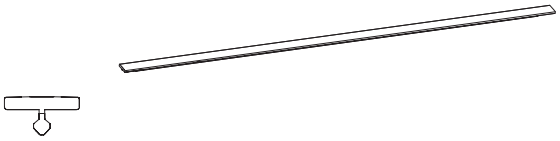

- Support for any chosen versions of the design profile
- Length 2000 mm
- For clipping on
- Grey plastic with adhesive strip

Order no.	PU
9 255 831	1 ea.

DesignCapes in anodised aluminium and stainless steel look can be used to create a wide variety of eye catchers even within the standard range. But here too, the AvanTech YOU platform offers further versatile customisation options if you do prefer your own materials and colour trends.

12 DesignCape

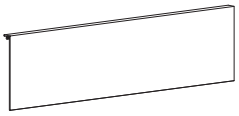

- For clipping on
- Aluminium / stainless steel look = length 2000mm
- Oak, copper and concrete look = length 1970 mm
- AluminiumSet comprises:
- Aluminium profile
- Fixing material

Nominal height mm	Order no. / Colour					PU
	aluminium look	stainless steel look	oak look	copper look	concrete look	
101	9 257 643	9 257 647	9 283 217	9 283 218	9 283 219	1 set
187	9 257 645	9 257 649	9 283 221	9 283 223	9 283 224	1 set

13 Branding clip

- Available on request with any chosen imprint or customer logo
- For clipping on
- Plastic

Colour	Order no.	PU
silver with Hettich logo	9 257 703	200 ea.
white with Hettich logo	9 257 704	200 ea.
anthracite with Hettich logo	9 257 705	200 ea.
silver	9 270 185	200 ea.
white	9 270 186	200 ea.
anthracite	9 270 187	200 ea.

Advice

- AvanTech YOU drawer
- AvanTech YOU pot-and-pan drawer
- AvanTech YOU Inlay pot-and-pan drawer
- Internal front panel options / rear panel options
- Accessories / Illumination
- Actro YOU / Quadro V6 YOU drawer runners
- Push to open Silent
- Quality criteria

hettich.com/short/1874ce

- Stunning accent lighting for AvanTech YOU shining either into the drawer or into the room
- Can be retrofitted as an option for system height of 101 / 139 / 187 / 251 mm
- Diffuse light, colour temperature 4000K
- 1 set per drawer, including 1 rechargeable battery pack
- Automatic illumination when opening the drawer, switches off when closing the drawer

14 A Illumination design profile

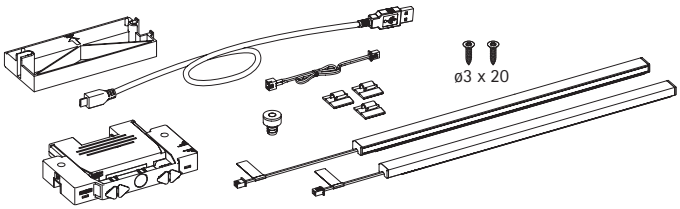

- Rechargeable lithium-ion battery
- Voltage 3.7 V DC
- Capacity 2300 mAh
- Power 8.51 Wh
- Rechargeable via micro USB
- Charging time approx. 4 hours with 500 mA charger
- Height adjusted components must be used when combined with the closed / customisable internal front panel

Set comprises:
- 2 LED light sets
- 1 magnet
- 1 rechargeable battery
- 1 rechargeable battery holder, self adhesive
- 1 adapter for steel rear panel
- 3 cable holder, self adhesive
- 1 charging cable, micro USB B
- 1 extension cable
- Fixing material

Nominal length mm	**Order no. / Colour**		PU
	anthracite	**stainless steel look**	
270	**9 326 922**	**9 326 873**	1 set
300	**9 326 923**	**9 326 874**	1 set
350	**9 326 924**	**9 326 875**	1 set
400	**9 326 925**	**9 326 876**	1 set
450	**9 326 926**	**9 326 877**	1 set
500	**9 326 927**	**9 326 878**	1 set
550	**9 326 928**	**9 326 879**	1 set
600	**9 326 929**	**9 326 880**	1 set
650	**9 326 930**	**9 326 921**	1 set

Advice

- AvanTech YOU drawer
- AvanTech YOU pot-and-pan drawer
- AvanTech YOU Inlay pot-and-pan drawer
- Internal front panel options / rear panel options
- Accessories / Illumination
- Actro YOU / Quadro V6 YOU drawer runners
- Push to open Silent
- Quality criteria

hettich.com/short/892f59

- Stunning accent lighting for AvanTech YOU
- Can optionally be retrofitted
- Diffuse light, colour temperature 4000K
- 1 set per drawer, including 1 rechargeable battery pack
- Automatic illumination when opening the drawer, switches off when closing the drawer

14 B Illumination Inlay drawer side

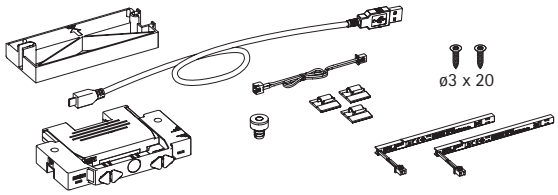

- Rechargeable lithium-ion battery
- Voltage 3.7 V DC
- Capacity 2300 mAh
- Power 8.51 Wh
- Rechargeable via micro USB
- Charging time approx. 4 hours with 500 mA charger

Set comprises:
- 2 LED light sets
- 1 magnet
- 1 rechargeable battery
- 1 rechargeable battery holder, self adhesive
- 1 adapter for steel rear panel
- 3 cable holder, self adhesive
- 1 charging cable, micro USB B
- 1 extension cable
- Fixing material

Order no.	PU
9 305 747	1 set

Advice

- AvanTech YOU drawer
- AvanTech YOU pot-and-pan drawer
- AvanTech YOU Inlay pot-and-pan drawer
- Internal front panel options / rear panel options
- Accessories / Illumination
- Actro YOU / Quadro V6 YOU drawer runners
- Push to open Silent
- Quality criteria

hettich.com/short/892f59

Connection for front panels from 10 mm

- For front panel thicknesses from 10 mm
- Socket for optimum fit in soft materials (MDF transverse tensile strength > 0.6 N/mm², Chipboard transverse tensile strength > 0.45 N/mm²)
- Self tapping screws for optimum fit in hard materials (e.g. solid surface material, natural stone, plastic, ceramic)
- Use with standard front panel connections
- The attachment method must be suitable for the type and quality of door material and tested for a secure fit

Connector for front panel thicknesses from 10 mm

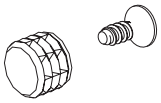

Set comprises:
- 10 sockets, ø 10 x 8 mm
- 10 self tapping screws, ø 3.5 x 16 mm

Order no.	PU
9 268 149	1 set

Installation aid

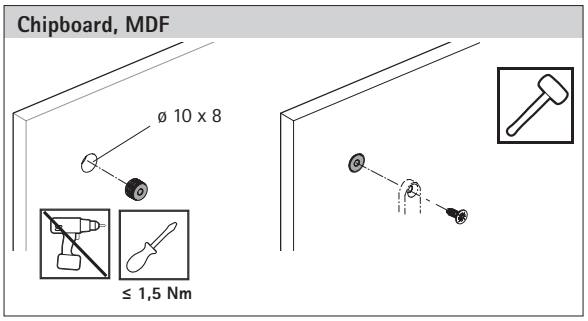

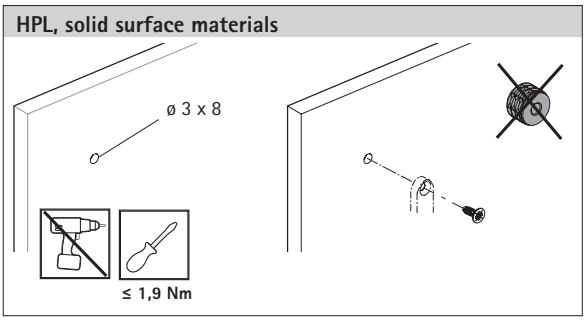

The attachment method must be suitable for the type and quality of door material and tested for a secure fit.

4 A Front stabiliser

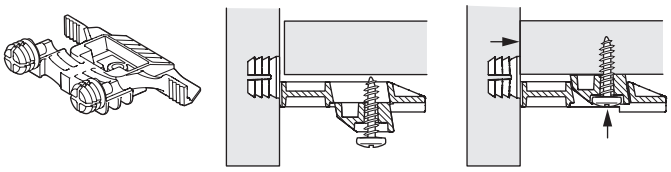

- For stabilising wide and/or high front panels
- Recommended for use in cabinet body widths 600 mm and over and / or front panel heights of 450 mm and over
- Can be used on fronts in a thickness of 10 mm and over – drilling depth 8 mm
- Mounted by knock in pin
- On screwing into place the front is automatically pulled against the base
- Lateral and vertical adjustments can be made without undoing the screw
- Plastic anthracite

Order no.	PU
9 321 561	150 ea.

Advice

- AvanTech YOU drawer
- AvanTech YOU pot-and-pan drawer
- AvanTech YOU Inlay pot-and-pan drawer
- Internal front panel options / rear panel options
- Design options / accessories / illumination
- Actro YOU / Quadro V6 YOU drawer runners
- Push to open Silent
- Quality criteria

hettich.com/short/c4a03a

Direct fixing screws

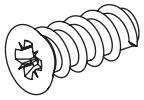

- Countersunk head
- Pozidrive screw
- Steel

Dimensions mm	Finish	Order no.	PU
6 ø x 14	nickel plated	**9 137 114**	200 ea.
6.3 ø x 14	galvanised	**0 051 265**	200 ea.

Chipboard screws, countersunk head

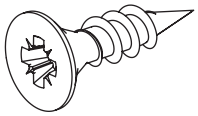

- Countersunk head
- Pozidrive screw
- Steel

Dimensions mm	Finish	Order no.	PU
ø 3.5 x 16	nickel plated	**0 071 925**	200 ea.
ø 4 x 16	nickel plated	**0 010 085**	200 ea.

Chipboard screws, panhead

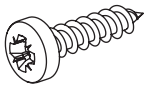

- Panhead
- Pozidrive screw
- Steel

Dimensions mm	Finish	Order no.	PU
ø 3,5 x 6,5	galvanised	**9 278 225**	200 ea.
ø 3.5 x 12	galvanised	**0 045 167**	200 ea.
ø 3.5 x 20	galvanised	**0 045 168**	200 ea.
ø 3,5 x 30	galvanised	**9 278 224**	200 ea.

Self tapping screw, panhead

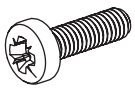

- Panhead
- Pozidrive screw
- Steel

Dimensions mm	Finish	Order no.	PU
ø 3,5 x 12	galvanised	**9 279 197**	200 ea.

- **Actro YOU drawer runner with Silent System, optionally available with Push to open Silent**
- **Load classes XS (10 kg) / L (40 kg) / XL (70 kg)**

11 A Actro YOU drawer runner with Silent System

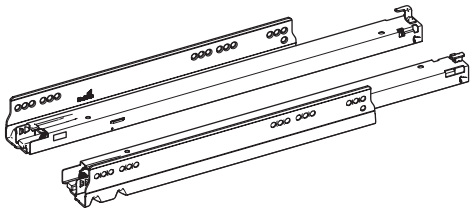

- Full extension runner for combining with AvanTech YOU system drawer or wooden drawer with catches
- Integrated **Silent System**
- Optional: Push to open Silent
- Load classes XS (10 kg) / L (40 kg) / XL (70 kg)
- Load capacity to EN 15338, Level 3
- Galvanised steel

Load class XS (10 kg)

Nominal length mm	Order no.	PU
270	**9 319 176**	1 pair
300	**9 319 177**	1 pair
350	**9 319 178**	1 pair

Load class M (30 kg)

Nominal length mm	Order no. / Mounting side		PU	Order no.	PU
	left	right			
270				**9 319 179**	1 pair
300				**9 319 180**	1 pair
350				**9 319 181**	1 pair
400	**9 318 175**	**9 318 176**	10 ea.	**9 318 190**	1 pair
450	**9 318 177**	**9 318 178**	10 ea.	**9 318 191**	1 pair
500	**9 318 179**	**9 318 180**	10 ea.	**9 318 192**	1 pair
550	**9 318 181**	**9 318 182**	10 ea.	**9 318 194**	1 pair

Load class XL (70 kg)

Nominal length mm	Order no.	PU
450	**9 319 187**	1 pair
500	**9 319 188**	1 pair
550	**9 319 189**	1 pair
600	**9 319 190**	1 pair
650	**9 319 191**	1 pair

Depth adjustment

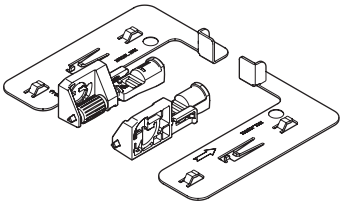

- Tool-less installation and adjustment up to +/- 2 mm
- For optional use with inset front panels
- Steel, grey plastic

Set comprises:
- 2 depth adjusters
- 2 activators

Order no.	PU
9 257 706	1 set

Advice

- AvanTech YOU drawer
- AvanTech YOU pot-and-pan drawer
- AvanTech YOU Inlay pot-and-pan drawer
- Internal front panel options / rear panel options
- Design options / accessories / illumination
- Push to open Silent
- Quality criteria

hettich.com/short/45025e

AvanTech YOU double walled drawer system

- **Actro YOU drawer runner with Silent System, optionally available with Push to open Silent**
- **Load classes XS (10 kg) / L (40 kg) / XL (70 kg)**

Lengthwise cross-section

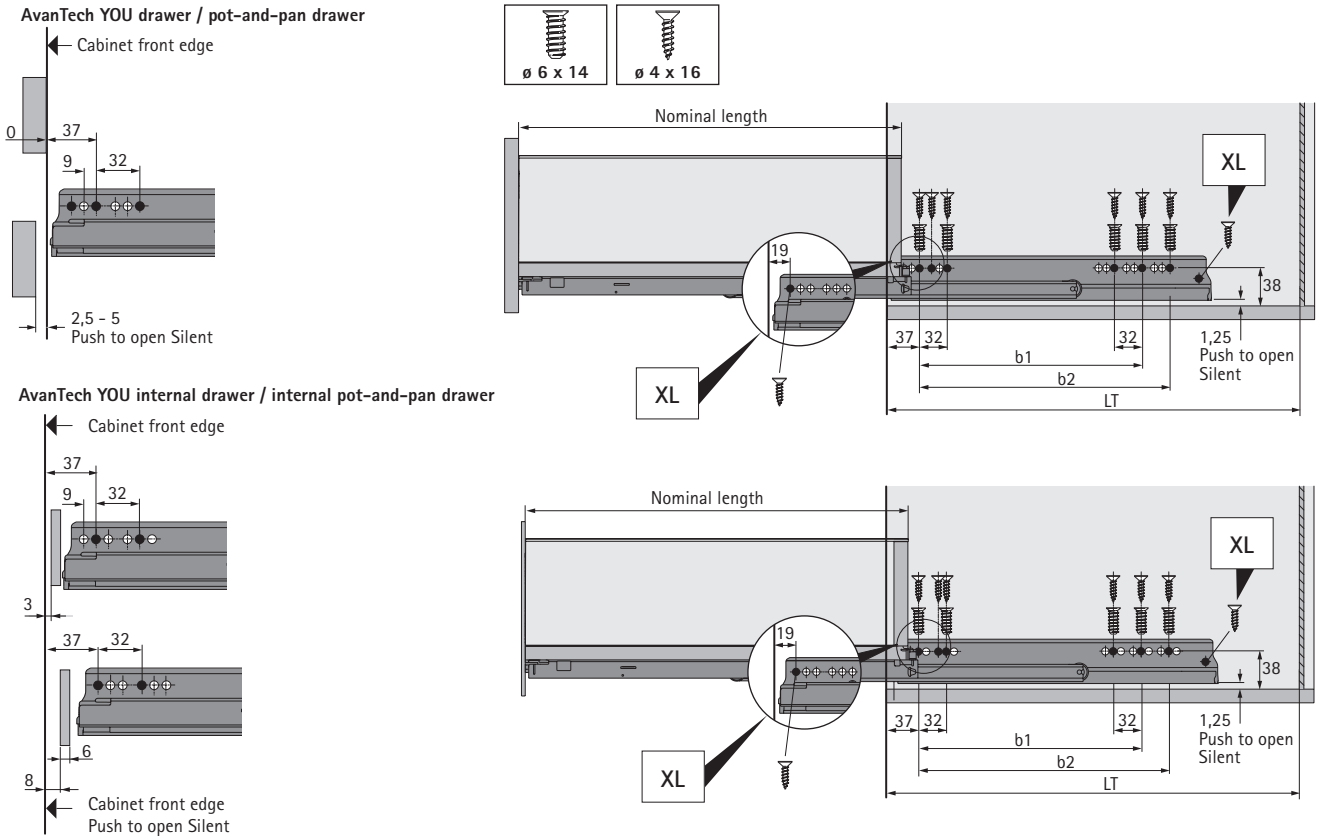

Installation dimensions for Actro YOU with Silent System / Push to open Silent

Nominal length mm	Hole spacing b1 mm	Hole spacing b2 mm	Drawer / pot-and-pan drawer Minimum cabinet depth LT mm	Internal drawer / internal pot-and-pan drawer Minimum cabinet depth LT mm	Internal drawer / internal pot-and-pan drawer Push to open Silent Minimum cabinet depth LT mm
270	160		273	282	291
300	160		303	312	321
350	224		353	362	371
400	224		403	412	421
450	256	288	453	462	471
500	256	320	503	512	521
550	256	320	553	562	571
600	256	320	603	612	621
650	256	416	653	662	671

Catches

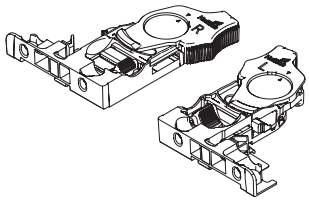

- For using Actro YOU with wooden drawers
- Height adjustment up to + 3 mm
- Plastic anthracite

Mounting side	**Order no.**	PU
left and right	**9 320 320**	5 pair
left	**9 320 331**	100 ea.
right	**9 320 332**	100 ea.

Push to open Silent opening system

Push to open Silent opening system

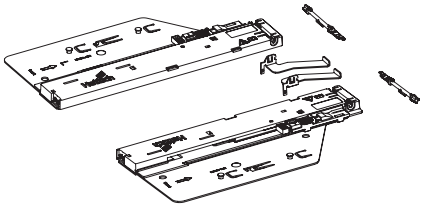

- For optimum performance and activation, fitting an optional synchronisation function is recommended

Set comprises:
- 1 Push to open Silent unit, left and right
- 1 activator, left and right
- 2 adapters for synchronisation

Total weight kg	Load class Actro	Nominal length mm	**Order no.**	PU
< 10	XS (10 kg)	270 - 350	**9 257 890**	1 set
8 - 20	L (40 kg)	270 - 600	**9 257 891**	1 set
10 - 40	L (40 kg)	350 - 600	**9 257 892**	1 set
20 - 70	XL (70 kg)	450 - 650	**9 257 893**	1 set

Recommendation for drawer (front panel height up to approx. 150 mm, light loading)*

Nominal length mm	Nominal width mm 275	300	350	400	500	600	700	800	900	1000	1100	1200
270												
300												
350												
400												
450												
500												
550												
650												

Recommendation for pot-and-pan drawer (front panel height up to approx. 300 mm, medium duty loading)*

Nominal length mm	Nominal width mm 275	300	350	400	500	600	700	800	900	1000	1100	1200
270												
300												
350												
400												
450												
500												
550												
650												

Recommendation for pot-and-pan drawer (front panel height up to approx. 300 mm, carrying heavy load, e.g. with stacks of plates)*

Nominal length mm	Nominal width mm 275	300	350	400	500	600	700	800	900	1000	1100	1200
270												
300												
350												
400												
450												
500												
550												
650												

Order no. Push to open Silent:	**9 257 890**	**9 257 891**	**9 257 892**	**9 257 893**

* Recommendations for applications (front panel 19 mm chipboard, normal household loading), please refer to our online configurator to get more exact recommendations for customer chosen front panel dimensions and materials.

Optional synchronisation for Push to open Silent

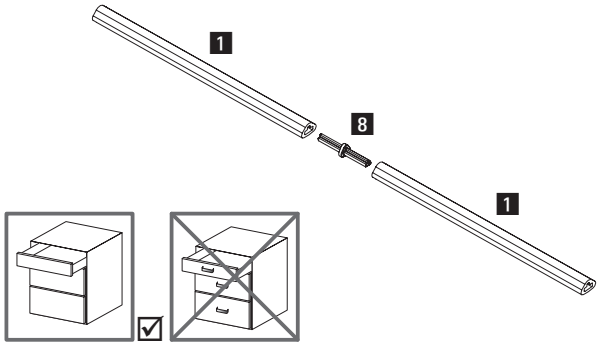

Synchronisation bar:
- For cutting to length, length 2000 mm
- Aluminium, anodised

Connector:
- For extending synchronisation bar / optimising synchronisation bar offcut waste
- Plastic, grey

Article	Order no.	PU
1 Synchronisation bar	**9 236 718**	100 ea.
8 Connector	**9 221 295**	20 ea.

Optional multi-synchronisation for Push to open Silent

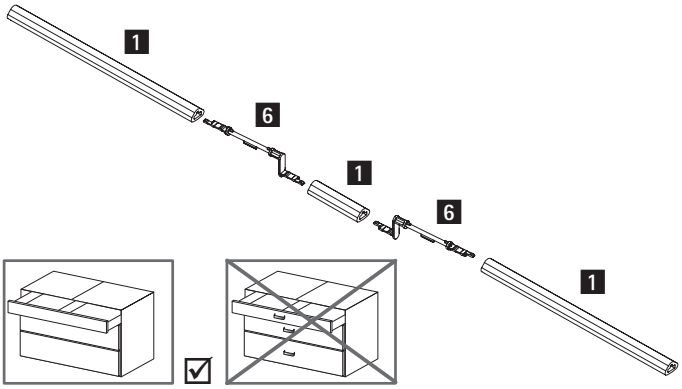

- Use recommended in conjunction with two drawers connected by one front panel
- Aluminium, anodised, grey plastic

Article	Order no.	PU
1 Synchronisation bar	**9 236 718**	100 ea.
6 Push to open Silent multi synchronisation adapter	**9 278 452**	20 ea.

Flexible adapter for Push to open Silent synchronisation

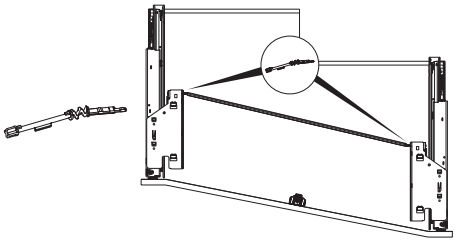

- For use in conjunction with lowered drawer runners with angled or curved fronts
- Depth offset max. 150 mm
- Angle at synchronisation bar max. 25°
- Replaces the adapter for synchronisation in the Push to open Silent set

Order no.	PU
9 262 213	20 ea.

Deflector for Push to open Silent synchronisation

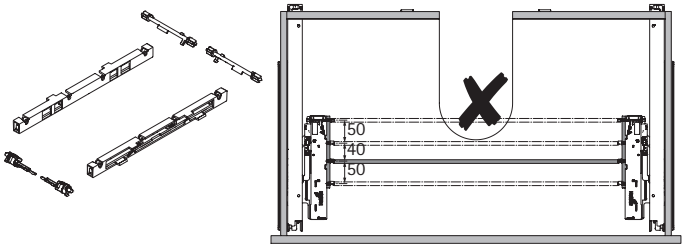

- For use, e.g. with U-bend applications
- Permits synchronisation in 3 different depth positions

Set comprises:
- 2 housings with premounted deflection bar
- 2 adapters for Push to open unit
- 2 adapters for synchronisation bar

Order no.	PU
9 278 453	1 set

Advice

- AvanTech YOU drawer
- AvanTech YOU pot-and-pan drawer
- AvanTech YOU Inlay pot-and-pan drawer
- Internal front panel options
- Design options / accessories / illumination
- Actro YOU / Quadro V6 YOU drawer runners
- Push to open Silent
- Quality criteria

hettich.com/short/370f63

- **Quadro V6 YOU drawer runner with Silent System, optionally with Push to open Silent**
- **Load classes XS (10 kg) / M (30 kg)**

11 B Quadro V6 YOU drawer runner with Silent System

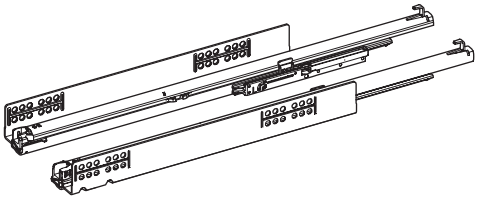

- Full extension runner for combining with AvanTech YOU system drawer or wooden drawer with catches
- Integrated **Silent System**
- Optional: Push to open Silent
- Optional: synchronisation / multi synchronisation for Push to open Silent
- Load classes XS (10 kg) / M (30 kg)
- Load capacity to EN 15338, Level 3
- Galvanised steel

Load class XS (10 kg)

Nominal length mm	Order no.	PU
270	**9 319 192**	1 pair
300	**9 319 193**	1 pair
350	**9 319 194**	1 pair

Load class M (30 kg)

Nominal length mm	Order no. / Mounting side		PU	Order no.	PU
	left	right			
270				**9 319 195**	1 pair
300				**9 319 196**	1 pair
350				**9 319 197**	1 pair
400	**9 303 772**	**9 303 773**	20 ea.	**9 319 198**	1 pair
450	**9 303 776**	**9 303 777**	20 ea.	**9 319 199**	1 pair
500	**9 303 780**	**9 303 781**	20 ea.	**9 319 200**	1 pair
550	**9 303 784**	**9 303 785**	20 ea.	**9 319 201**	1 pair
600				**9 319 202**	1 pair

Advice

- AvanTech YOU drawer
- AvanTech YOU pot-and-pan drawer
- AvanTech YOU Inlay pot-and-pan drawer
- Internal front panel options / rear panel options
- Design options / accessories / illumination
- Push to open Silent
- Quality criteria

hettich.com/short/45025e

AvanTech YOU double walled drawer system

- **Quadro V6 YOU drawer runner with Silent System, optionally with Push to open Silent**
- **Load classes XS (10 kg) / M (30 kg)**

Lengthwise cross-section

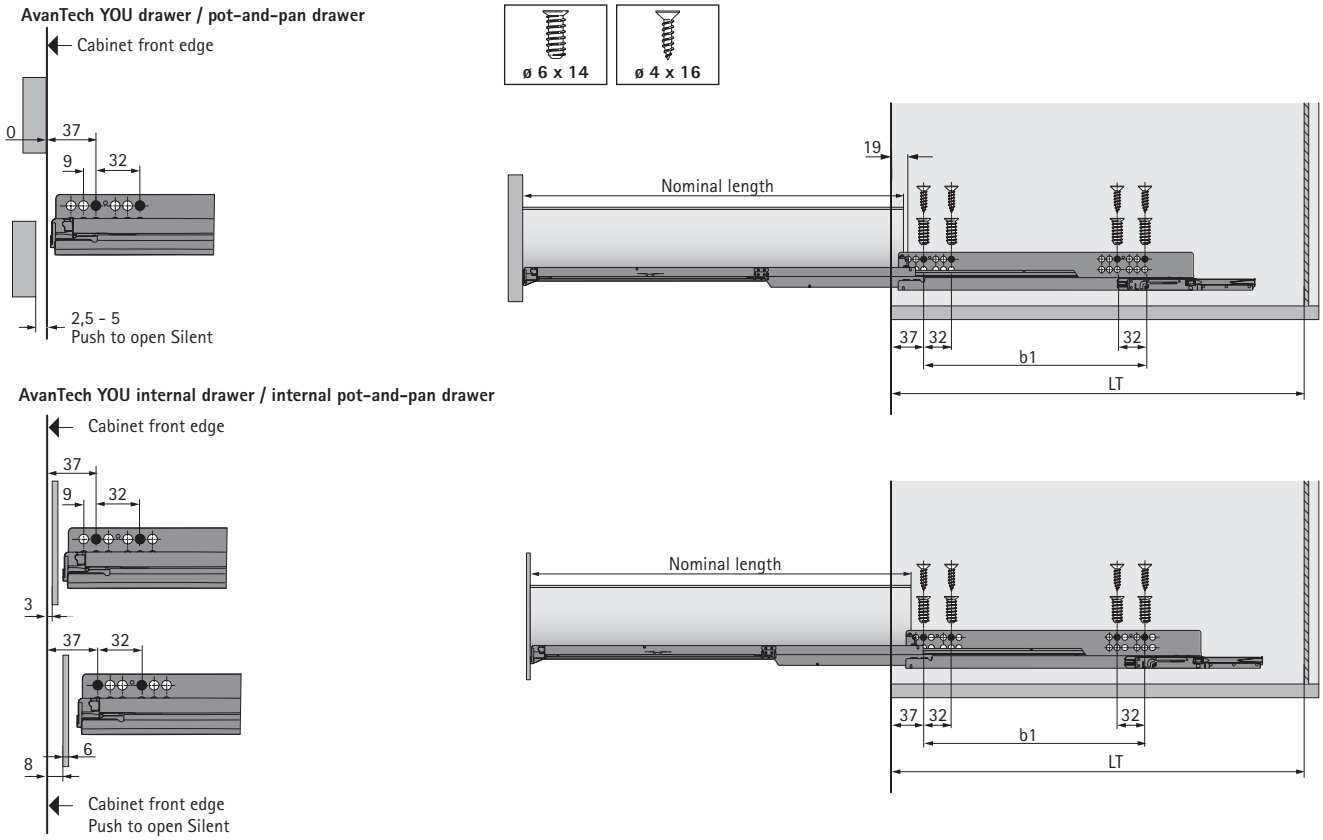

Installation dimensions for Quadro V6 YOU with Silent System / Push to open Silent

Nominal length mm	Hole spacing b1 mm	Drawer / pot-and-pan drawer Minimum cabinet depth LT mm	Internal drawer / internal pot-and-pan drawer Minimum cabinet depth LT mm	Internal drawer / internal pot-and-pan drawer Push to open Silent Minimum cabinet depth LT mm
270	160	273	282	291
300	160	303	312	321
350	224	353	362	371
400	224	403	412	421
450	256	453	462	471
500	256	503	512	521
550	256	553	562	571
600	256	603	612	621

Catches

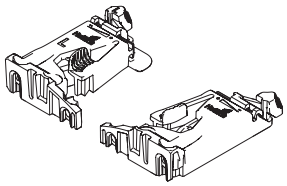

- For using Quadro V6 YOU with wooden drawers
- Height adjustment up to + 3 mm
- Plastic anthracite

Mounting side	**Order no.**	PU
left and right	**9 257 262**	5 pair
left	**9 257 260**	100 ea.
right	**9 257 261**	100 ea.

Push to open Silent opening system for Quadro V6 YOU

Push to open Silent opening system

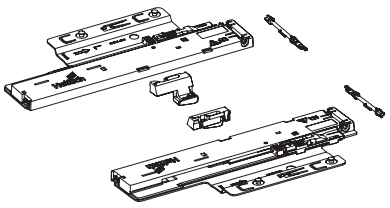

- For optimum performance and activation, fitting an optional synchronisation function is recommended

Set comprises:
- 1 Push to open Silent unit, left and right
- 1 activator, left and right
- 2 adapters for synchronisation

Total weight kg	Load class for Quadro	Nominal length mm	**Order no.**	PU
< 10	XS (10 kg)	270 - 350	**9 257 894**	1 set
8 - 20	M (30 kg)	270 - 600	**9 257 895**	1 set
10 - 30	M (30 kg)	350 - 600	**9 257 896**	1 set

Recommendation for drawer (front panel height up to approx. 150 mm, light loading)*

	Nominal width mm												
Nominal length mm	275	300	350	400	450	500	550	600	700	800	900	1000	1200
270													
300													
350													
400													
450													
500													
550													
600													

Recommendation for pot-and-pan drawer (front panel height up to approx. 300 mm, medium duty loading)*

	Nominal width mm												
Nominal length mm	275	300	350	400	450	500	550	600	700	800	900	1000	1200
270													
300													
350													
400													
450													
500													
550													
600													

Recommendation for pot-and-pan drawer, heavy duty (front panel height up to approx. 300 mm, heavy duty loading, e.g. with stacks of plates)*

	Nominal width mm												
Nominal length mm	275	300	350	400	450	500	550	600	700	800	900	1000	1200
270													
300													
350													
400													
450													
500													
550													
600													

Order no. Push to open Silent:	**9 257 894**	**9 257 895**	**9 257 896**

* Recommendations for applications (front panel 19 mm chipboard, normal household loading), please refer to our online configurator to get more exact recommendations for customer chosen front panel dimensions and materials.

Optional synchronisation for Push to open Silent

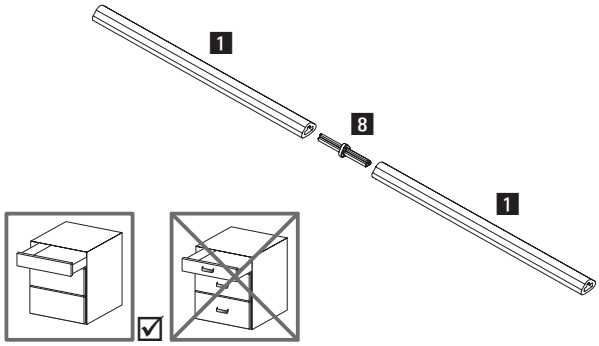

Synchronisation bar:
- For cutting to length, length 2000 mm
- Aluminium, anodised

Connector:
- For extending synchronisation bar / optimising synchronisation bar offcut waste
- Plastic, grey

Article	Order no.	PU
1 Synchronisation bar	**9 236 718**	100 ea.
8 Connector	**9 221 295**	20 ea.

Optional multi-synchronisation for Push to open Silent

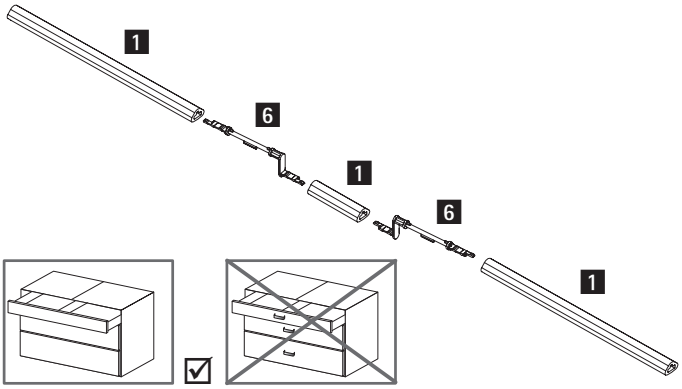

- For two drawers connected by one front panel
- Aluminium, anodised, grey plastic

Article	Order no.	PU
1 Synchronisation bar	**9 236 718**	100 ea.
6 Push to open Silent multi synchronisation adapter	**9 278 452**	20 ea.

Flexible adapter for Push to open Silent synchronisation

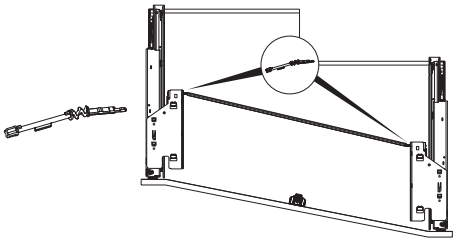

- For lowered drawer runners with angled or curved fronts
- Depth offset max. 150 mm
- Angle at synchronisation bar max. 25°
- Replaces the adapter for synchronisation in the Push to open Silent set

Order no.	PU
9 262 213	20 ea.

Deflector for Push to open Silent synchronisation

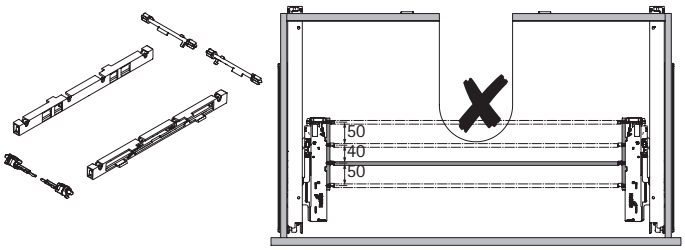

- For use with e.g. U-bend applications
- Permits synchronisation in 3 different depth positions

Set comprises:
- 2 housings with premounted deflection bar
- 2 adapters for Push to open unit
- 2 adapters for synchronisation bar

Order no.	PU
9 278 453	1 set

Advice

- AvanTech YOU drawer
- AvanTech YOU pot-and-pan drawer
- AvanTech YOU Inlay pot-and-pan drawer
- Internal front panel options
- Design options / accessories / illumination
- Actro YOU / Quadro V6 YOU drawer runners
- Push to open Silent
- Quality criteria

hettich.com/short/370f63

Precision that gets things moving
The Actro 5D drawer runner is simply the perfect choice for unique furniture design, narrow reveals and large front panels. Adjusting in 5 directions, front panel reveal alignment meets the most exacting demands. Excellent running performance and incredible stability provide supreme quality you can feel and hear.

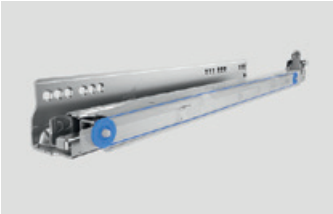

Make a great impact with smooth running action:
Actro 5D, smooth running and synchronised

Fascinate with minimal reveals:
5-way adjustment for extremely narrow reveals

Impress with stability:
up to 70 kg load capacity

Effortlessly handleless:
Push to open Silent combines elegance with convenience

Drawer runners for wooden drawers

Actro 5D full extension runner with Silent System, optionally with Push to open Silent

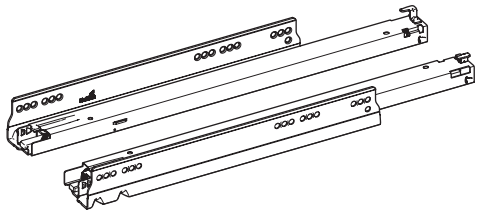

- **Silent System** - the integrated Silent System closes the drawer quietly and gently
- Catch for convenient slide on installation must be ordered separately
- Tool-less, intuitive vertical adjustment up to + 3 mm, lateral adjustment up to +/- 1.5 mm, radial adjustment up to +/- 1.5 mm and tilt adjustment + 4 mm
- Optional: depth adjustment up to +/- 2 mm
- Optional: Push to open Silent opening system
- Load capacity to EN 15338, Level 3
- Galvanised steel, suitable for rooms exposed to moisture

Load class L (40 kg)

Nominal length mm	**Order no. / Mounting side**		PU	**Order no.**	PU
	left	**right**		**sets**	
350				**9 318 282**	1 set
380				**9 318 283**	1 set
400				**9 318 284**	1 set
420				**9 318 285**	1 set
450	**9 318 251**	**9 318 252**	10 ea.	**9 318 286**	1 set
480				**9 318 287**	1 set
500	**9 318 256**	**9 318 258**	10 ea.	**9 318 288**	1 set
520				**9 318 289**	1 set
550				**9 318 290**	1 set
600				**9 318 291**	1 set

Load class XL (70 kg)

Nominal length mm	**Order no.**	PU
	sets	
580	**9 318 314**	1 set
600	**9 318 315**	1 set
650	**9 318 316**	1 set
700	**9 318 317**	1 set
750	**9 318 318**	1 set

Actro 5D full extension runner with Silent System, optionally with Push to open Silent

Actro 5D catch

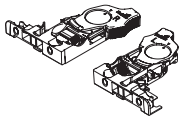

- Tool-less, intuitive side adjustment up to +/- 1.5 mm
- Height adjustment up to + 3 mm
- Die-cast zinc / plastic

Cabinet side	Order no.	PU
left and right	**9 320 333**	1 pair
left	**9 320 334**	100 ea.
right	**9 320 335**	100 ea.

Depth adjustment

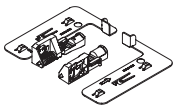

- Tool-less installation and adjustment up to + 4 mm
- For optional use with inset front panels
- Plastic, grey

Set comprises:
- 2 depth adjusters
- 2 activators

Cabinet side	Order no.	PU
left / right	**9 257 706**	1 set

Front cross section

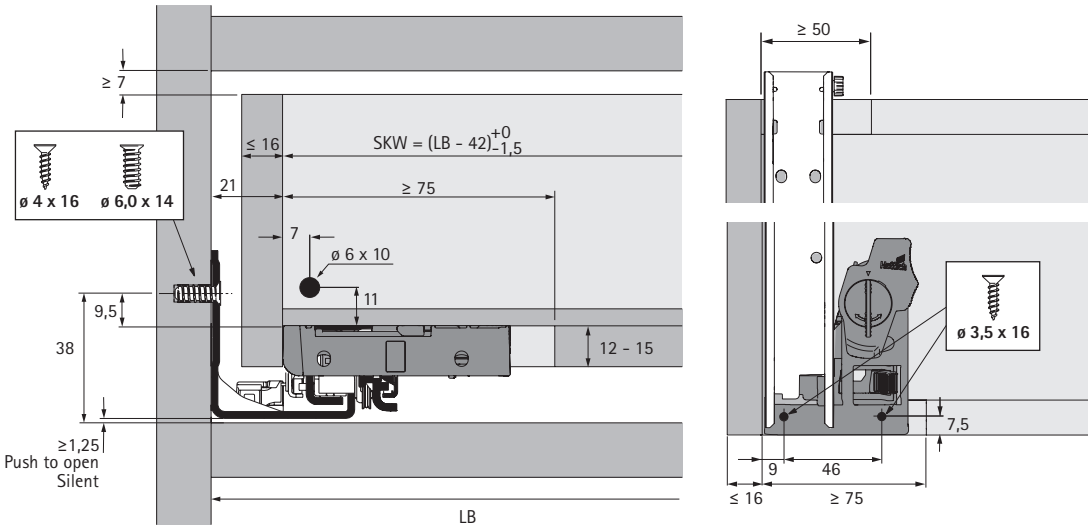

LB Clear inside width
SKW Internal drawer width

Side cross section

NL mm	b1 mm	b2 mm
250	160	
270	160	
300	160	
320	224	
350	224	
380	224	
400	224	
420	224	
450	256	288
480	256	
500	256	320
520	256	320
550	256	320
580	256	320
600	256	320
650	256	416
700	256	416
750	256	416

NL Nominal length
LT Clear inside depth
SKL Drawer length

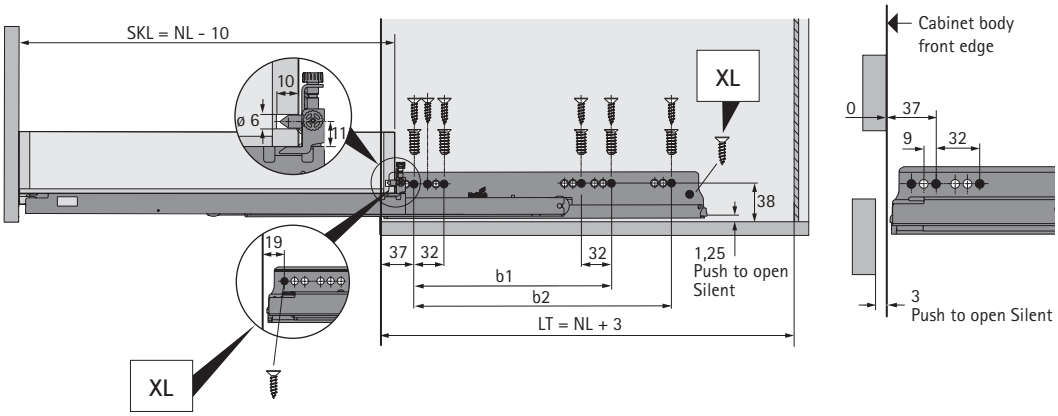

Push to open Silent opening system for Actro 5D

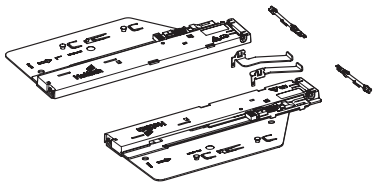

- Can be used with AvanTech YOU system drawer on Actro YOU drawer runner with Silent System
- Optional synchronisation possible

Set comprises:
- 1 Push to open Silent unit, left and right
- 1 activator, left and right
- 2 adapters for synchronisation

Total weight kg	Load class Actro kg	Nominal length mm	**Order no.**	PU
< 10	XS (10 kg)	270 - 350	**9 257 890**	1 set
8 - 20	L (40 kg)	270 - 650	**9 257 891**	1 set
10 - 40	L (40 kg)	270 - 650	**9 257 892**	1 set
20 - 70	XL (70 kg)	400 - 650	**9 257 893**	1 set

Optional synchronisation for Push to open Silent

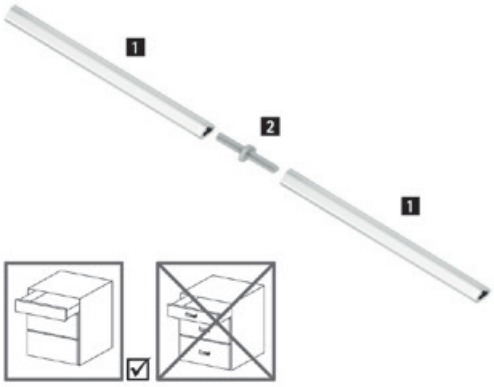

Synchronisation bar:
- For cutting to length
- Length 2000 mm
- Aluminium anodised

Connector:
- For connecting 2 synchronisation bars
- Plastic, grey

Article	**Order no.**	PU
1 Synchronisation bar	**9 236 718**	1/100 ea.
2 Connectors	**9 221 295**	1/20 ea.

Push to open Silent opening system for Actro 5D

Recommendation for drawer (front panel height up to approx. 150 mm)*

	Nominal width mm												
Nominal length mm	275	300	350	400	450	500	550	600	700	800	900	1000	1200
250 - 300													
320 - 350													
380 - 550													
580 - 750													

Recommendation for pot-and-pan drawer (front panel height up to approx. 300 mm, medium duty loading)*

	Nominal width mm												
Nominal length mm	275	300	350	400	450	500	550	600	700	800	900	1000	1200
250 - 300													
320 - 350													
380													
400 - 550													
580 - 750													

Recommendation for pot-and-pan drawer (front panel height up to approx. 300 mm, carrying heavy load, e.g. with stacks of plates)*

	Nominal width mm												
Nominal length mm	275	300	350	400	450	500	550	600	700	800	900	1000	1200
250 - 300													
320 - 350													
380													
400 - 550													
580 - 750													

Order no. Push to open Silent:	9 257 890	9 257 891	9 257 892	9 257 893

* Recommendations for standard applications (front panel 19 mm chipboard, normal household loading), please refer to our online configurator to get more exact recommendations for customer chosen front panel dimensions and materials.

hettich.com/short/a9ab20

Quality that meets all the demands

The quality of the drawer systems is monitored continuously. Hettich fittings comply with the national and international quality standards of the markets our customers operate in. The diagrams below show some of the tests Hettich fittings are required to pass.

Application area
Hettich drawer systems are suitable for use in living room, kitchen, bathroom and office furniture both in the home and business environment.

Load capacity and guards preventing unintentional detachment / removal
The load capacity indicated (to DIN EN 15338) is understood to mean the weight of the drawer itself, including contents, in kg. The applicable level is shown on the product. The load capacity refers to a reference length of 500 mm. The load capacity may vary for other nominal lengths. All Hettich drawer systems feature guards to prevent the drawer from rolling out and being removed unintentionally and meet the requirements of the impact test in a test frame to EN 15338. Fitted in the proper manner, the drawer systems are suitable for furniture defined in EN 14749. The maximum front panel height depends in particular on the material, drawer size and drawer runner. Testing is conducted on drawers with a 130 mm front panel height and pot-and-pan drawers with a 300 mm front panel height. We will be pleased to provide any further information you may require.

Corrosion test
Hettich runner systems satisfy the requirements on corrosion defined in DIN EN 15338, 72 hour condensation water test to DIN EN 6270.

Wear test

The fully laden drawer must remain in proper working order after opening and closing it for a defined number of times at a defined test velocity.

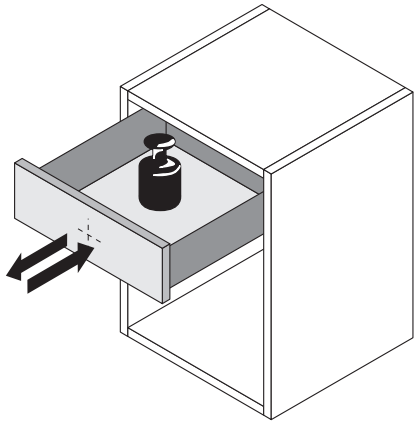

Retention-on-opening test

The fully laden drawer is abruptly opened all the way several times at a defined test velocity.

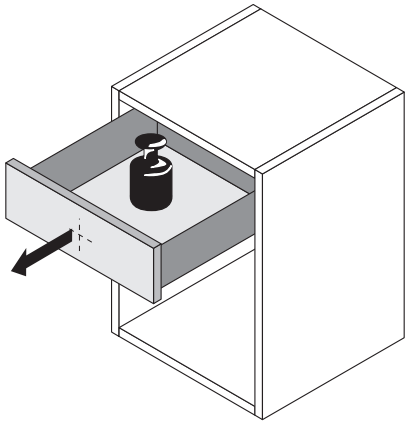

Horizontal load test

Opened all the way, the fully laden drawer is additionally exposed to horizontal strain from a defined lateral force.

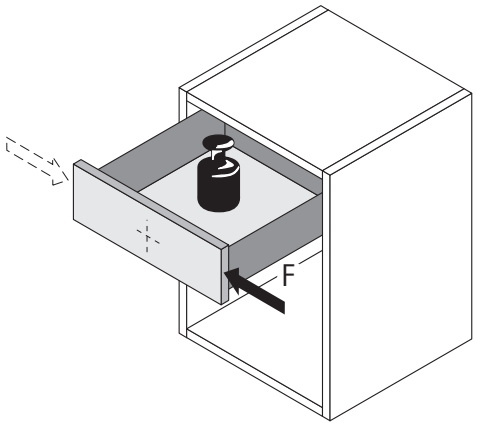

Vertical strain test

Opened all the way, the drawer is additionally exposed to vertical strain from a defined eccentric force.

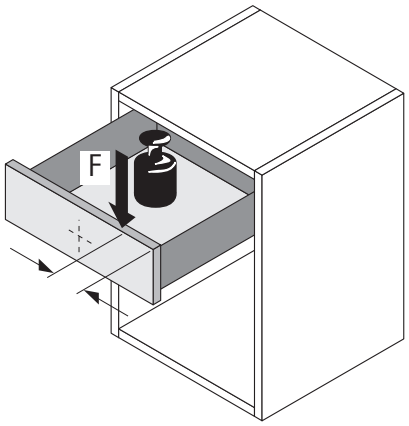

Order no.	Page
9 318 615	9
9 318 713	9
9 318 751	9
0 79665	9
9 255 832	9
9 255 833	9
9 318 617	11
9 318 618	11
9 318 619	11
9 318 620	11
9 318 681	11
9 318 682	11
9 318 683	11
9 318 684	11
9 318 685	11
9 318 715	11
9 318 716	11
9 318 717	11
9 318 718	11
9 318 719	11
9 318 720	11
9 318 721	11
9 318 722	11
9 318 723	11
9 318 753	11
9 318 754	11
9 318 755	11
9 318 756	11
9 318 757	11
9 318 758	11
9 318 759	11
9 318 760	11
9 318 771	11
9 255 014	11
9 255 016	11
9 255 018	11
9 255 015	11
9 255 017	11
9 255 019	11
9 255 094	11
9 255 096	11
9 255 098	11
9 255 095	11
9 255 097	11
9 255 099	11
9 255 174	11
9 255 175	11
9 255 176	11
9 255 177	11

Order no.	Page
9 255 178	11
9 255 179	11
9 257 702	12
9 318 686	15
9 318 687	15
9 318 688	15
9 318 689	15
9 318 690	15
9 318 691	15
9 318 692	15
9 318 693	15
9 318 694	15
9 318 724	15
9 318 725	15
9 318 726	15
9 318 727	15
9 318 728	15
9 318 729	15
9 318 730	15
9 318 731	15
9 318 732	15
9 318 772	15
9 318 773	15
9 318 774	15
9 318 775	15
9 318 776	15
9 318 777	15
9 318 778	15
9 318 779	15
9 318 780	15
9 255 032	15
9 255 033	15
9 255 034	15
9 255 035	15
9 255 036	15
9 255 037	15
9 255 112	15
9 255 114	15
9 255 116	15
9 255 113	15
9 255 115	15
9 255 117	15
9 255 118	15
9 255 119	15
9 255 198	15
9 255 199	15
9 255 192	15
9 255 193	15
9 255 194	15

Order no.	Page
9 255 195	15
9 255 196	15
9 255 197	15
9 255 198	15
9 255 199	15
9 257 885	16
9 318 695	19
9 318 696	19
9 318 697	19
9 318 698	19
9 318 699	19
9 318 700	19
9 318 701	19
9 318 702	19
9 318 703	19
9 318 733	19
9 318 734	19
9 318 735	19
9 318 736	19
9 318 737	19
9 318 738	19
9 318 739	19
9 318 740	19
9 318 741	19
9 318 791	19
9 318 792	19
9 318 793	19
9 318 794	19
9 318 795	19
9 318 796	19
9 318 797	19
9 318 798	19
9 318 799	19
9 255 050	19
9 255 051	19
9 255 052	19
9 255 053	19
9 255 054	19
9 255 055	19
9 255 130	19
9 255 131	19
9 255 132	19
9 255 133	19
9 255 134	19
9 255 135	19
9 255 136	19
9 255 137	19
9 255 210	19
9 255 211	19

Order no.	Page
9 255 212	19
9 255 213	19
9 255 214	19
9 255 215	19
9 255 216	19
9 255 217	19
9 318 704	23
9 318 705	23
9 318 706	23
9 318 707	23
9 318 708	23
9 318 709	23
9 318 710	23
9 318 742	23
9 318 743	23
9 318 744	23
9 318 745	23
9 318 746	23
9 318 747	23
9 318 748	23
9 318 800	23
9 318 801	23
9 318 802	23
9 318 803	23
9 318 805	23
9 318 806	23
9 318 807	23
9 255 148	23
9 255 149	23
9 255 150	23
9 255 151	23
9 255 152	23
9 255 153	23
9 255 228	23
9 255 229	23
9 255 230	23
9 255 231	23
9 255 232	23
9 255 233	23
9 257 887	24
9 257 888	24
9 318 808	27
9 318 809	27
9 318 811	27
9 318 812	27
9 318 814	27
9 318815	27
9 318816	27
9 318 817	27

Order no.	Page
9 318 818	27
9 318 819	27
9 318 820	27
9 318 821	27
9 318 822	27
9 318 823	27
9 318 824	27
9 318 825	27
9 318 826	27
9 318 827	27
9 318 828	27
9 318 829	27
9 318 830	27
9 283 178	27
9 283 179	27
9 283180	27
9 283 181	27
9 283 182	27
9 282 183	27
9 283 184	27
9 257 258	28
9 268 677	28
9 257 268	30
9 257 270	30
9 257 271	30
9 257 273	30
9 257 274	30
9 257 275	30
9 257 277	30
9 257 278	30
9 257 279	30
9 327 202	30
9 327 203	30
9 327 204	30
9 327 205	30
9 327 206	30
9 327 207	30
9 327 208	30
9 327 209	30
9 327 210	30
9 257611	30
9 257612	30
9 257613	30
9 257615	30
9 257616	30
9 257617	30
9 257619	30
9 257620	30
9 257621	30

Order no.	Page
9 327 211	30
9 327 212	30
9 327 213	30
9 327 214	30
9 327 215	30
9 327 216	30
9 327 217	30
9 327 218	30
9 327 219	30
9 257 623	31
9 257 625	31
9 257 627	31
9 257 734	32
9 257 735	32
9 257 736	32
9 257 641	32
9 337 220	34
9 337 221	34
9 327 222	34
9 257 663	34
9 257 664	34
9 257 665	34
9 257 651	34
9 257 652	34
9 257 653	34
9 257 657	34
9 257 658	34
9 257 659	34
9 283 185	35
9 283 186	35
9 283 187	35
9 283 188	35
9 283 189	35
9 283 190	35
9 283 191	35
9 283 192	35
9 257 666	36
9 257 667	36
9 257 668	36
9 257 669	36
9257670	36
9257671	36
9257672	36
9257673	36
9257678	36
9257679	36
9257680	36
9257681	36
9257682	36

Order no.	Page
9 257 683	36
9 257 684	36
9 257 685	36
9 257 690	36
9 257 691	36
9 257 692	36
9 257 693	36
9 257 694	36
9 257 695	36
9 257 696	36
9 257 697	36
9 257 300	36
9 257 301	36
9 257 302	36
9 257 303	36
9 257 305	36
9 257 306	36
9 257 307	36
9 257 308	36
9 257 310	36
9 257 311	36
9 257 312	36
9 257 313	36
9 255 759	42
9 255 760	42
9 255 761	42
9 255 762	42
9 255 763	42
9 255 764	42
9 255 765	42
9 255 766	42
9 255 767	42
9 255 768	42
9 255 769	42
9 255 770	42
9 255 771	42
9 255 772	42
9 255 773	42
9 255 774	42
9 255 775	42
9 255 776	42
9 255 777	42
9 255 778	42
9 255 779	42
9 255 780	42
9 255 781	42
9 255 782	42
9 255 783	42
9 255 784	42

Order no.	Page
9 255 785	42
9 255 786	42
9 255 787	42
9 255 788	42
9 255 789	42
9 255 790	42
9 255 791	42
9 255 792	42
9 255 793	42
9 255 794	42
9 255 795	42
9 255 796	42
9 255 797	42
9 255 798	42
9 255 799	42
9 255 800	42
9 255 801	42
9 255 802	42
9 255 803	42
9 255 831	42
9 257 643	43
9 257 645	43
9 257 647	43
9 257 649	43
9 283 217	43
9 283 221	43
9 283 218	43
9 283 223	43
9 283 219	43
9 283 224	43
9 257 703	43
9 257 704	43
9 257 705	43
9 270 185	43
9 270 186	43
9 270 187	43
9 326 922	44
9 326 923	44
9 326 924	44
9 326 925	44
9 326 926	44
9 326 927	44
9 326 928	44
9 326 929	44
9 326 930	44
9 326 873	44
9 326 874	44
9 326 875	44
9 326 876	44

Order no.	Page
9 326 877	44
9 326 878	44
9 326 879	44
9 326 880	44
9 326 921	44
9 305 747	45
9 268 149	46
9 321 561	46
9 137 114	47
0 051 265	47
0 071 925	47
0 010 085	47
9 278225	47
0 045 167	47
0 045 168	47
9 278 224	47
9 279 197	47
9 318 175	48
9 318 176	48
9 318 177	48
9 318 178	48
9 318 179	48
9 318 180	48
9 318 181	48
9 318 182	48
9 318 190	48
9 318 191	48
9 318 192	48
9 318 194	48
9 319 176	48
9 319 177	48
9 319 178	48
9 319 179	48
9 319 180	48
9 319 181	48
9 319 187	48
9 319 188	48
9 319 189	48
9 319 190	48
9 319 191	48
9 320 320	49
9 320 331	49
9 320 332	49
9 257 890	50
9 257 891	50
9 257 892	50
9 257 893	50
9 303 772	52
9 303 773	52

Order no.	Page
9 303 776	52
9 303 777	52
9 303 780	52
9 303 781	52
9 303 784	52
9 303 785	52
9 319 192	52
9 319 193	52
9 319 194	52
9 319 195	52
9 319 196	52
9 319 197	52
9 319 198	52
9 319 199	52
9 319 200	52
9 319 201	52
9 319 202	52
9 257 262	53
9 257 260	53
9 257 261	53
9 257 894	54
9 257 895	54
9 257 896	54
9 318 282	58
9 318 283	58
9 318 284	58
9 318 285	58
9 318 286	58
9 318 287	58
9 318 288	58
9 318 289	58
9 318 290	58
9 318 291	58
9 318 314	58
9 318 315	58
9 318 316	58
9 318 317	58
9 318 318	58
9 318 251	58
9 318 252	58
9 318 256	58
9 318 258	58
9 257 268	59
9 257 266	59
9 257 264	59
9 257 706	59
9 320 333	59
9 320 334	59
9 320 335	59

Order no.	Page
9 257 890	60
9 257 891	60
9 257 892	60
9 257 893	60
9 255 835	12,16,20,24,31
9 255 836	12,16,20,24
9 257 884	12,16,20,24,31
9 257 885	12,16,20,24
9 255 838	12,16,20,24,31
9 255 839	12,16,20,24
9 257 702	12,16,20,24
9 257 702	12,16,20,24,28
9 257 257	28,31
9 278 452	51,55
9 262 213	51,55
9 278 453	51,55
9 236 718	51,55,60
9 221 295	51,55,60

Publisher's imprint

© Hettich Marketing- und Vertriebs
GmbH & Co. KG
32602 Vlotho, Germany

We reserve all rights to this
catalogue under copyright law.
It shall not be permissible to
duplicate this catalogue in any form
either in whole or in part without
our written consent.
Subject to technical alterations.
Errors and omissions excepted.
Subject to colour variations.

June 2023
Order no.: 9293684

Hettich Australia

© Hettich Australia
6 Entolasia Close
Kemps Creek NSW 2178

Free Phone: 1800 687 789
Instagram @hettichaustralia
support@hettich.com.au
https://web.hettich.com/en-au/home

Order no.: 9 293 684
2007-003_AvanTech_YOU_07/20_HAU/en

Technik für Möbel

Hettich